LOT 2
OLD MILL OR 2351/678

LAND EDGAR LEE & ERIN DEMAREST
56240 GRIFFIN RD
CALLAHAN, FL 32011

2023

35-3N-25-1815-0002-0000

NASSAU COUNTY PROPERTY

BUILDING CHARACTERISTICS

ELEMENT	CD	CONSTRUCTION
Exterior Wall	31	HARDIE BRD 100
Roof Structur	03	GABLE/HIP 100
Roof Cover	03	COMP SHNGL 100
Interior Wall	05	DRYWALL 100
Interior Floo	13	LVT/LAMNT 100
Air Condition	03	CENTRAL 100
Heating Type	04	AIR DUCTED 100
Bedrooms		5 100
Bathrooms		3.5 100
Frame	02	WOOD FRAME 100
Stories	2.	2. 100
Units		0 100
Occupancy	00	NONE 100
Quality	03	Quality Level 03

DOR CODE	0100	SINGLE FAMILY	
MAP NUM		MKT AREA	05
NEIGHBORHOOD/LOC	5001.00		

AREA TYPE	TOTAL GROSS AREA	PCT OF BASE	TOT ADJ AREA	SUBAREA MARKET VALUE
BAS	2,651	100	2,651	314,488
FGR	693	55	381	45,198
FOP	102	30	31	3,678
FOP	198	30	59	6,999
FUS	404	100	404	47,927
STR	49	10	5	593
TOTALS	4,097		3,531	418,883

MARKET ADJUSTMENTS

TYPE	MDL	EFF. AREA	TOT ADJ PTS	EFF. BASE RATE	REPL. COST NEW	AYB	EYB	ECON	FNCT		NORM	% COND
0900	01	3,531	99.9000	118.63	418,883	2022	2022	0	0	0	0.00	100.00

1 SNGL FAM – 100% - 2023 Heated Area: 3055 HX Base Yr 2023

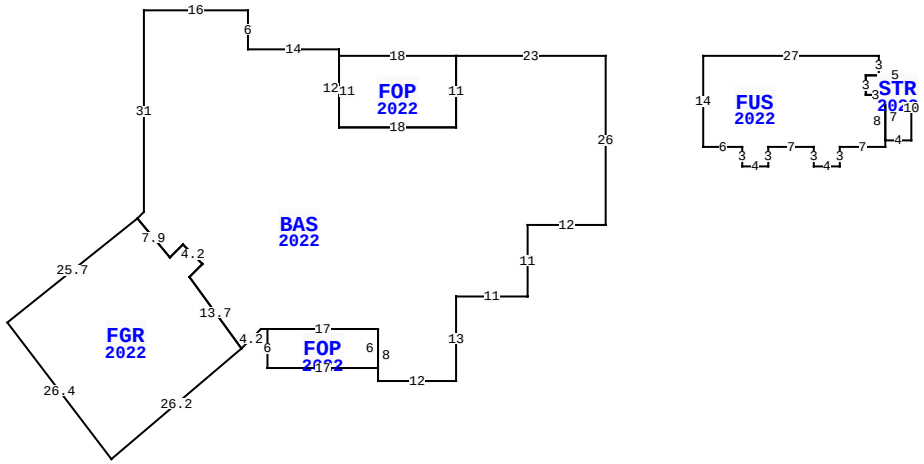

56240 GRIFFIN RD, CALLAHAN

BLD DATE		LGL DATE	
XF DATE		LAND DATE	05/19/2023 MLU
INC DATE		AG DATE	

VALUATION SUMMARY

VALUATION BY		STANDARD
Tax Group: 4	Tax Dist:	
BUILDING MARKET VALUE		418,883
TOTAL MARKET OB/XF VALUE		66,173
TOTAL LAND VALUE - MARKET		124,800
TOTAL MARKET VALUE		609,856
SOH/AGL Deduction		19,198
ASSESSED VALUE		590,658
TOTAL EXEMPTION VALUE	HX HB	50,000
BASE TAXABLE VALUE		540,658
TOTAL JUST VALUE		609,856
NCON VALUE		485,056
INCOME VALUE		
PREVIOUS YEAR MKT VALUE		140,400

PERMIT NUM	DESCRIPTION	AMT	ISSUED
22008150	CO ISSUED	0	09/14/2022
22008150	NEW CONSTR	390,092	05/25/2022
21017129	SWIM POOL	68,337	12/10/2021

SALES DATA

OFF RECORD Number	DATE	TYPE INST	Q U	V I	RSN CD	SALE PRICE
2417/0203	12/15/2020	SW	Q	I	01	149,900

GRANTOR: RAYDIENT LLC
GRANTEE: LAND EDGAR LEE & ER

BUILDING NOTES

BUILDING DIMENSIONS

BAS=[YR=2022] W23 FOP=[YR=2022] W18 S11 E18 N11$ S11 W18 N12W14 N6 W16 S31 D1 L1 FGR=[YR=2022] D16 L20 D21 R16 U17 R20 U11 L8 U2 R2 U3 L3 D2 L2 U6 L5 $ D6 R5 U2 R2 D3 R3 L2 D2 R8 D11 U3 R3 E1 FOP=[YR=2022] S6 E17 N6 W17$ E17 S8 E12 N13 E11 N11 E12 N26$ PTR= E15 FUS=[YR=2022] E27 S3 STR=[YR=2022] E5 S10 W4 N7 W3 N3 E2$ W2 S3 E3 S8 W7 S3 W4 N3 W7 S3 W4 N3 W6 N14$ W15$.

EXTRA FEATURES

LN	OB/XF CODE	DESCRIPTION	BLD	CAP	L	W	UNITS	UT	Adj R	ADJ UNIT PRICE	ORIG COND	YEAR ON	YEAR ACTUAL	Q	% COND	OB/XF MKT VALUE	NOTES
1	0810	CONCRETE A	0	100	0	0	1,702.00	SF	6.50	6.50	100	2022	2022	3	100	11,063	
2	0861	POOL GUNIT	0	100	0	0	440.00	SF	85.00	85.00	100	2022	2022	3	100	37,400	
3	0855	CONC PAVER	0	100	0	0	1,055.00	SF	10.00	10.00	100	2022	2022	3	100	10,550	
4	0462	ST/AL FNC	0	100	0	0	456.00	SF	10.00	10.00	100	2022	2022	3	100	4,560	
5	0463	FENCE GATE	0	100	0	0	2.00	UT	300.00	300.00	100	2022	2022	3	100	600	
6	0504	FP-ELECTRI	0	100	0	0	1.00	UT	2,000.00	2,000.00	100	2022	2022	3	100	2,000	

LAND DESCRIPTION

TOTAL OB/XF 66,173

LN	USE CODE	CLS	LAND USE DESCRIPTION	CAP	RD	LOC ZONE	FRONT	DEPTH	TOT LND UTS	UNIT TYPE	DT	DPTH FACT	% COND	TOT ADJ	UNIT PRICE	ADJ UNIT PRICE	LAND VALUE	OTHER ADJUSTMENTS AND NOTES	YEAR	DENSITY	DECL	FRZ	YR	CONSRV
1	000115	C	SFR ACRES	100			0.00	0.00	7.80	AC		1.00	1.00	1.00	16,000.00	16,000.00	124,800							

REVIEW DATE 03/07/2023 BY DJ Total Acres: 7.80 Total Land Value: 124,800 Market: 0 Agricultural: 0 Common: 124,800 PRINTED 08/02/2023 BY SYS