PT OF N1/2 OF SEC 33-3N-25E
IN OR 2252/1455(EX PT
IN OR 1889/51)

SNEAD DAVID S JR/THOMPSON LAUREN M
47260 SAWTOOTH RIDGE
CALLAHAN, FL 32011

2023

33-3N-25-0000-0003-0150

NASSAU COUNTY PROPERTY

BUILDING CHARACTERISTICS

ELEMENT	CD	CONSTRUCTION
Exterior Wall	10	ABOVE AVG 100
Roof Structur	03	GABLE/HIP 100
Roof Cover	03	COMP SHNGL 100
Interior Wall	05	DRYWALL 60
Interior Wall	06	CUST PANEL 40
Interior Floo	11	CLAY TILE 50
Interior Floo	12	HARDWOOD 50
Air Condition	03	CENTRAL 100
Heating Type	04	AIR DUCTED 100
Bedrooms		2 100
Bathrooms		2.5 100
Frame	02	WOOD FRAME 100
Stories	1.	1. 100
Units		0 100
Occupancy	00	NONE 100
Quality	02	Quality Level 02

DOR CODE	0100	SINGLE FAMILY	
MAP NUM		MKT AREA	05
NEIGHBORHOOD/LOC	5001.00		

AREA TYPE	TOTAL GROSS AREA	PCT OF BASE	TOT ADJ AREA	SUBAREA MARKET VALUE
BAS	1,702	100	1,702	212,670
FGR	576	55	317	39,610
FOP	368	30	110	13,745
FSP	798	40	319	39,860
FST	48	55	26	3,249
FUS	284	100	284	35,487
STP	8	10	1	125
STP	8	10	1	125
STP	12	10	1	125
STP	12	10	1	125
TOTALS	3,816		2,762	345,122

MARKET ADJUSTMENTS

TYPE	MDL	EFF. AREA	TOT ADJ PTS	EFF. BASE RATE	REPL. COST NEW	AYB	EYB	ECON	FNCT		NORM	% COND
0900	01	2,762	112.5408	133.64	369,114	2008	2008	0	0	0	6.50	93.50

1 SNGL FAM – 100% - 2020 Heated Area: 1986 HX Base Yr 2020

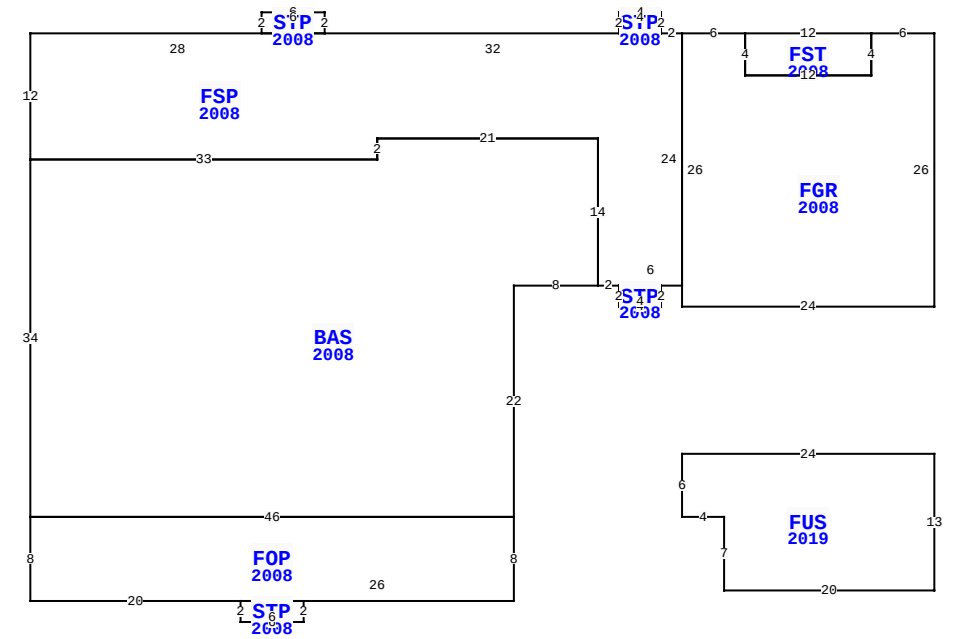

47260 SAWTOOTH RDG, CALLAHAN

BLD DATE	03/03/2023 NW	LGL DATE	
XF DATE		LAND DATE	05/19/2023 MLU
INC DATE		AG DATE	

VALUATION SUMMARY

VALUATION BY		STANDARD
Tax Group: 4	Tax Dist:	
BUILDING MARKET VALUE		345,122
TOTAL MARKET OB/XF VALUE		9,996
TOTAL LAND VALUE - MARKET		161,560
TOTAL MARKET VALUE		516,678
SOH/AGL Deduction		182,168
ASSESSED VALUE		334,510
TOTAL EXEMPTION VALUE	HX HB	50,000
BASE TAXABLE VALUE		284,510
TOTAL JUST VALUE		516,678
NCON VALUE		0
INCOME VALUE		
PREVIOUS YEAR MKT VALUE		427,612

PERMIT NUM	DESCRIPTION	AMT	ISSUED
B1327667	REPAIR/RRF	7,800	10/01/2013
C20624	CO ISSUED	254,958	10/01/2007
R10770	REPAIR/RRF	6,000	10/01/2007
E20092	ELEC OTHER	3,000	10/01/2007
M13352	MECH OTHER	0	10/01/2007
P12764	OTHER	0	10/01/2007

SALES DATA

OFF RECORD Number	DATE	TYPE INST	Q U	V I	RSN CD	SALE PRICE
2252/1455	1/25/2019	WD	Q	I	01	350,000
GRANTOR: THOMPSON CURTIS L & S						
GRANTEE: SNEAD DAVID S JR &						
1856/0129	5/10/2013	WD	Q	I	02	225,000
GRANTOR: CBC NATIONAL BANK						
GRANTEE: THOMPSON CURTIS L &						

BUILDING NOTES

BUILDING DIMENSIONS

FGR=[YR=2008] W6 FST=[YR=2008] W12 S4 E12 N4$ S4 W12 N4 W6
FSP=[YR=2008] W2 STP=[YR=2008] N2 W4 S2 E4$ W32
STP=[YR=2008] N2 W6 S2 E6$ W28 S12 BAS=[YR=2008] S34
FOP=[YR=2008] S8 E20 STP=[YR=2008] S2 E6 N2 W6$ E26 N8 W46$
E46 N22 E8 N14 W21 S2 W33 $ E33 N2 E21 S14 E2 STP=[YR=2008]
S2 E4 N2 W4$ E6 N24$ S26 E24 N26$ PTR=S40 FUS=[YR=2019] S13
W20 N7 W4 N6 E24$ N40 $.

EXTRA FEATURES

LN	OB/XF CODE	DESCRIPTION	BLD	CAP	L	W	UNITS	UT	Adj R	ADJ UNIT PRICE	ORIG COND	YEAR ON	YEAR ACTUAL	Q	% COND	OB/XF MKT VALUE	NOTES
1	0811	CONCRETE B	0	100	0	0	543.00	SF	5.20	5.20	100	2008	2008	3	90	2,541	
2	0810	CONCRETE A	0	100	25	20	500.00	SF	6.50	6.50	100	2008	2008	3	90	2,925	
3	0810	CONCRETE A	0	100	18	8	144.00	SF	6.50	6.50	100	2008	2008	3	90	842	
4	0825	BRICK	0	100	0	0	70.00	SF	12.50	12.50	100	2008	2008	3	97	849	
5	0940	SHEDS/PORT	0	100	14	12	168.00	SF	30.00	30.00	100	2008	2008	3	40	2,016	
6	0681	POLE SHED	0	100	14	7	98.00	SF	15.00	15.00	100	2008	2008	3	56	823	

LAND DESCRIPTION

TOTAL OB/XF 9,996

LN	USE CODE	CLS	LAND USE DESCRIPTION	CAP	RD	LOC ZONE	FRONT	DEPTH	TOT LND UTS	UNIT TYPE	DT	DPTH FACT	% COND	TOT ADJ	UNIT PRICE	ADJ UNIT PRICE	LAND VALUE	OTHER ADJUSTMENTS AND NOTES	YEAR	DENSITY	DECL	FRZ	YR	CONSRV
1	000115	C	SFR ACRES	100	0007	OR	0.00	0.00	1.00	AC		1.00	1.00	1.00	35,000.00	35,000.00	35,000							
2	000115	C	SFR ACRES	100	0007		0.00	0.00	7.91	AC		1.00	1.00	1.00	16,000.00	16,000.00	126,560							

REVIEW DATE 08/08/2018 BY KBX Total Acres: 8.91 Total Land Value: 161,560 Market: 0 Agricultural: 0 Common: 161,560 PRINTED 08/02/2023 BY SYS