LOT 28
IN OR 363 PG 359
CORNWALL SURVEY

FRANKLIN C E
P O BOX 809
HILLIARD, FL 32046-0809

2023

32-4N-24-2020-0028-0000

BUILDING CHARACTERISTICS

ELEMENT	CD	CONSTRUCTION
Exterior Wall	20	FACE BRICK 90
Exterior Wall	12	CEDAR 10
Roof Structur	03	GABLE/HIP 100
Roof Cover	03	COMP SHNGL 100
Interior Wall	05	DRYWALL 100
Interior Floo	14	CARPET 70
Interior Floo	11	CLAY TILE 30
Air Condition	03	CENTRAL 100
Heating Type	04	AIR DUCTED 100
Bedrooms		3 100
Bathrooms		2.5 100
Frame	02	WOOD FRAME 100
Stories	1.	1. 100
Units		0 100
BUD8 Adjustme	04	DIST 01 100
Occupancy	00	NONE 100
Quality	01	Quality Level 01
DOR CODE	5000	IMPROVED AG
MAP NUM		MKT AREA 09
NEIGHBORHOOD/LOC	9001.00	

AREA TYPE	TOTAL GROSS AREA	PCT OF BASE	TOT ADJ AREA	SUBAREA MARKET VALUE
BAS	2,312	100	2,312	215,263
FEP	48	80	38	3,538
FGR	784	55	431	40,129
FOP	24	30	7	652
FOP	128	30	38	3,538
PTO	700	5	35	3,259
TOTALS	3,996		2,861	266,378

MARKET ADJUSTMENTS

TYPE	MDL	EFF. AREA	TOT ADJ PTS	EFF. BASE RATE	REPL. COST NEW	AYB	EYB	ECON	FNCT		NORM	% COND
0900	01	2,861	94.9212	112.72	322,492	1988	1998	0	0	0	17.40	82.60

1 SNGL FAM – 100% - 0 Heated Area: 2312 HX Base Yr

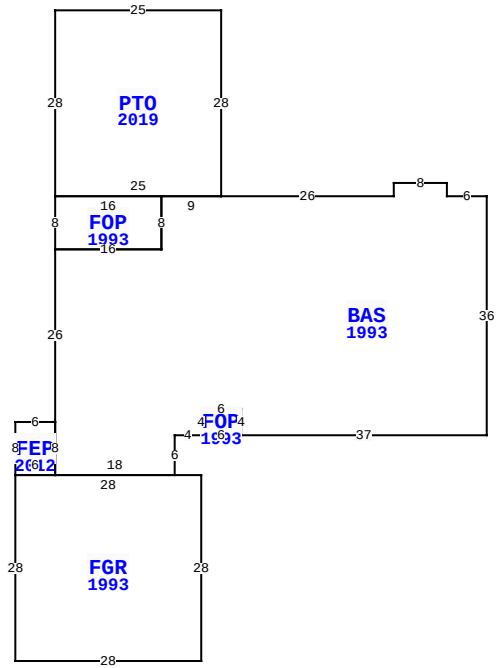

28151 FT SUMTER PL, HILLIARD

BLD DATE		LGL DATE	
XF DATE		LAND DATE	06/15/2023 MLU
INC DATE		AG DATE	

NASSAU COUNTY PROPERTY

PAGE 1 of 2 4

VALUATION SUMMARY

VALUATION BY		STANDARD
Tax Group: 4	Tax Dist:	
BUILDING MARKET VALUE		266,378
TOTAL MARKET OB/XF VALUE		72,948
TOTAL LAND VALUE - MARKET		201,000
TOTAL MARKET VALUE		373,016
SOH/AGL Deduction		166,560
ASSESSED VALUE		206,456
TOTAL EXEMPTION VALUE	HX HB	50,000
BASE TAXABLE VALUE		156,456
TOTAL JUST VALUE		540,326
NCON VALUE		0
INCOME VALUE		
PREVIOUS YEAR MKT VALUE		299,756

PERMIT NUM	DESCRIPTION	AMT	ISSUED
22012228	GARAGE	0	08/10/2022
20005436	REPAIR/RRF	15,384	06/23/2020
2134	H/AC	5,000	04/29/1987
2541	NEW CONSTR	0	04/29/1987
4050	NEW CONSTR	84,564	04/29/1987
4191	NEW CONSTR	2,000	04/29/1987

SALES DATA

OFF RECORD Number	DATE	TYPE INST	Q U	V I	RSN CD	SALE PRICE
0105/0169	1/01/1970	TA	U	V		100

GRANTOR:

GRANTEE:

BUILDING NOTES

BUILDING DIMENSIONS

BAS=[YR=1993] W6 N2 W8 S2 W26 PTO=[YR=2019] N28 W25 S28 FOP=[YR=1993] S8 E16 N8 W16$ E25$ W9 S8 W16 S26 FEP=[YR=2012] W6 S8 FGR=[YR=1993] S28 E28 N28 W28 $ E6 N8 $ S8 E18 N6 E4 FOP=[YR=1993] E6 N4 W6 S4 $ N4E6 S4 E37 N36 $.

EXTRA FEATURES

LN	OB/XF CODE	DESCRIPTION	BLD	CAP	L	W	UNITS	UT	Adj R	ADJ UNIT PRICE	ORIG COND	YEAR ON	YEAR ACTUAL	Q	% COND	OB/XF MKT VALUE	NOTES
1	0812	CONCRETE C	0	100	0	0	4,590.00	SF	4.00	4.00	100	1988	1988	3	57	10,465	
2	0910	SCRN RM L	0	100	0	0	83.00	SF	15.00	15.00	100	1988	1988	3	20	249	
3	0511	GARAGE CB-	0	100	14	22	308.00	SF	40.00	40.00	100	1989	1989	3	59.5	7,330	
4	0681	POLE SHED	0	100	12	22	264.00	SF	15.00	15.00	100	1989	1989	3	20	792	
5	0500	FP-PRE FAB	0	100	0	0	1.00	UT	3,500.00	3,500.00	100	1988	1988	3	66	2,310	
6	0910	SCRN RM L	0	100	28	25	700.00	SF	15.00	15.00	100	1990	1990	3	20	2,100	
7	0812	CONCRETE C	0	100	0	0	5,890.00	SF	4.00	4.00	100	1991	1991	3	64	15,078	
8	0510	GARAGE WD-	0	100	0	0	1,875.00	SF	35.00	35.00	100	2000	2000	3	29	19,031	
9	0810	CONCRETE A	0	100	0	0	420.00	SF	6.50	6.50	100	2000	2000	3	80	2,184	
10	0351	CARPORT MT	0	100	0	0	1,010.00	SF	10.00	10.00	100	2000	2000	3	20	2,020	

TOTAL OB/XF 61,559

LAND DESCRIPTION

LN	USE CODE	CLS	LAND USE DESCRIPTION	CAP	RD	LOC ZONE	FRONT	DEPTH	TOT LND UTS	UNIT TYPE	DT	DPTH FACT	% COND	TOT ADJ	UNIT PRICE	ADJ UNIT PRICE	LAND VALUE	OTHER ADJUSTMENTS AND NOTES	YEAR	DENSITY	DECL	FRZ	YR	CONSRV
1	005000	C	RURAL HOME	100	0007	OR	0.00	0.00	1.00	AC		1.00	1.00	1.00	30,000.00	30,000.00	30,000							
2	005600	A	TIMBER 3 SI	0			0.00	0.00	9.00	AC		1.00	1.00	1.00	410.00	410.00	3,690							
3	009910	M	MKT.VAL.AG	0			0.00	0.00	9.00	AC		1.00	1.00	1.00	19,000.00	19,000.00	171,000							

REVIEW DATE 10/20/2020 BY TWX Total Acres: 10.00 Total Land Value: 33,690 Market: 171,000 Agricultural: 3,690 Common: 30,000 PRINTED 08/02/2023 BY SYS

LOT 28
IN OR 363 PG 359
CORNWALL SURVEY

FRANKLIN C E
P O BOX 809
HILLIARD, FL 32046-0809

2023

32-4N-24-2020-0028-0000

NASSAU COUNTY PROPERTY

BUILDING CHARACTERISTICS

ELEMENT	CD	CONSTRUCTION

DOR CODE	5000	IMPROVED AG	
MAP NUM		MKT AREA	09
NEIGHBORHOOD/LOC	9001.00		

AREA TYPE	TOTAL GROSS AREA	PCT OF BASE	TOT ADJ AREA	SUBAREA MARKET VALUE
TOTALS				

MARKET ADJUSTMENTS

TYPE	MDL	EFF. AREA	TOT ADJ PTS	EFF. BASE RATE	REPL. COST NEW	AYB	EYB	ECON	FNCT		NORM	% COND

VALUATION SUMMARY

VALUATION BY		STANDARD
Tax Group: 4	Tax Dist:	
BUILDING MARKET VALUE		266,378
TOTAL MARKET OB/XF VALUE		72,948
TOTAL LAND VALUE - MARKET		201,000
TOTAL MARKET VALUE		373,016
SOH/AGL Deduction		166,560
ASSESSED VALUE		206,456
TOTAL EXEMPTION VALUE	HX HB	50,000
BASE TAXABLE VALUE		156,456
TOTAL JUST VALUE		540,326
NCON VALUE		0
INCOME VALUE		
PREVIOUS YEAR MKT VALUE		299,756

PERMIT NUM	DESCRIPTION	AMT	ISSUED

SALES DATA

OFF RECORD Number	DATE	TYPE INST	Q U /	V I /	RSN CD	SALE PRICE
0105/0169	1/01/1970	TA	U	V		100

GRANTOR:

GRANTEE:

BLD DATE		LGL DATE	
XF DATE		LAND DATE	06/15/2023 MLU
INC DATE		AG DATE	

BUILDING NOTES

BUILDING DIMENSIONS

EXTRA FEATURES

LN	OB/XF CODE	DESCRIPTION	BLD	CAP	L	W	UNITS	UT	Adj R	ADJ UNIT PRICE	ORIG COND	YEAR ON	YEAR ACTUAL	Q	% COND	OB/XF MKT VALUE	NOTES
11	0201	BARN WD 10	0	100	50	40	2,000.00	SF	17.00	17.00	100	2000	2000	3	29	9,860	
12	0810	CONCRETE A	0	100	21	14	294.00	SF	6.50	6.50	100	2000	2000	3	80	1,529	

TOTAL OB/XF 11,389

LAND DESCRIPTION

LN	USE CODE	CLS	LAND USE DESCRIPTION	CAP	RD	LOC ZONE	FRONT	DEPTH	TOT LND UTS	UNIT TYPE	DT	DPTH FACT	% COND	TOT ADJ	UNIT PRICE	ADJ UNIT PRICE	LAND VALUE	OTHER ADJUSTMENTS AND NOTES	YEAR	DENSITY	DECL	FRZ	YR	CONSRV

REVIEW DATE 10/20/2020 BY TWX Total Acres: 10.00 Total Land Value: 33,690 Market: 171,000 Agricultural: 3,690 Common: 30,000 PRINTED 08/02/2023 BY SYS