BLOCK 1 LOT 1
IN OR 2001/599

DOVER STEPHEN D & JENNIFER H
95235 BIG OAK AVE
FERNANDINA BEACH, FL 32034

**2023**

**32-2N-28-0150-0001-0010**

## BUILDING CHARACTERISTICS

| ELEMENT | CD | CONSTRUCTION |
|---|---|---|
| Exterior Wall | 31 | HARDIE BRD 100 |
| Roof Structur | 03 | GABLE/HIP 100 |
| Roof Cover | 12 | MODULAR MT 100 |
| Interior Wall | 05 | DRYWALL 100 |
| Interior Floo | 13 | LVT/LAMNT 50 |
| Interior Floo | 14 | CARPET 50 |
| Air Condition | 03 | CENTRAL 100 |
| Heating Type | 04 | AIR DUCTED 100 |
| Bedrooms | | 3 100 |
| Bathrooms | | 2 100 |
| Frame | 02 | WOOD FRAME 100 |
| Stories | 1.5 | 1.5 100 |
| Units | | 0 100 |
| Occupancy | 00 | NONE 100 |
| Quality | 03 | Quality Level 03 |
| DOR CODE | 0100 | SINGLE FAMILY |
| MAP NUM | | MKT AREA 04 |
| NEIGHBORHOOD/LOC | 4007.00 | |

| AREA TYPE | TOTAL GROSS AREA | PCT OF BASE | TOT ADJ AREA | SUBAREA MARKET VALUE |
|---|---|---|---|---|
| BAS | 2,004 | 100 | 2,004 | 242,792 |
| FGR | 612 | 55 | 337 | 40,829 |
| FOP | 154 | 30 | 46 | 5,573 |
| FUS | 288 | 100 | 288 | 34,892 |
| STR | 48 | 10 | 5 | 605 |
| TOTALS | 3,106 | | 2,680 | 324,692 |

## MARKET ADJUSTMENTS

| TYPE | MDL | EFF. AREA | TOT ADJ PTS | EFF. BASE RATE | REPL. COST NEW | AYB | EYB | ECON | FNCT | | NORM | % COND |
|---|---|---|---|---|---|---|---|---|---|---|---|---|
| 0900 | 01 | 2,680 | 104.6400 | 124.26 | 333,017 | 2016 | 2016 | 0 | 0 | 0 | 2.50 | 97.50 |

1 SNGL FAM – 100% - 2017 Heated Area: 2292 HX Base Yr 2017

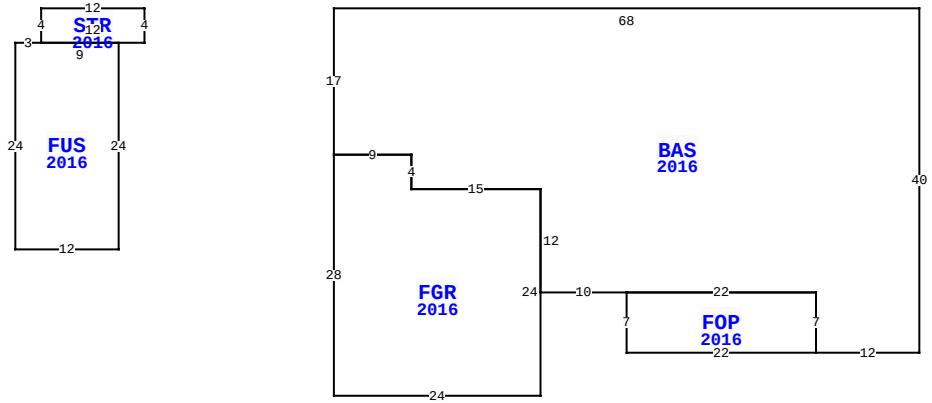


95235 BIG OAK AVE, FERNANDINA BEACH

| | | | |
|---|---|---|---|
| BLD DATE | | LGL DATE | |
| XF DATE | | LAND DATE | 05/26/2023 MLU |
| INC DATE | | AG DATE | |

## NASSAU COUNTY PROPERTY

PAGE 1 of 2 4

### VALUATION SUMMARY

| | | |
|---|---|---|
| VALUATION BY | | STANDARD |
| Tax Group: 4 | Tax Dist: | |
| BUILDING MARKET VALUE | | 340,803 |
| TOTAL MARKET OB/XF VALUE | | 12,793 |
| TOTAL LAND VALUE - MARKET | | 85,000 |
| TOTAL MARKET VALUE | | 438,596 |
| SOH/AGL Deduction | | 221,546 |
| ASSESSED VALUE | | 217,050 |
| TOTAL EXEMPTION VALUE | HX HB | 50,000 |
| BASE TAXABLE VALUE | | 167,050 |
| TOTAL JUST VALUE | | 438,596 |
| NCON VALUE | | 0 |
| INCOME VALUE | | |
| PREVIOUS YEAR MKT VALUE | | 322,987 |

| PERMIT NUM | DESCRIPTION | AMT | ISSUED |
|---|---|---|---|
| B1632611 | CO ISSUED | 0 | 12/21/2016 |
| B1632611 | C HOLLOWAY | 261,128 | 07/06/2016 |
| R1615129 | MTL ROOF | 9,000 | 07/01/2016 |
| B1530571 | DEMOLITION | 0 | 06/01/2015 |
| 961320 | MH MOVE-ON | 0 | 07/16/1996 |
| 963074 | GARAGE | 8,770 | 07/01/1996 |

## SALES DATA

| OFF RECORD Number | DATE | TYPE INST | Q U | V I | RSN CD | SALE PRICE |
|---|---|---|---|---|---|---|
| 2001/0599 | 8/28/2015 | SW | U | I | 12 | 29,500 |
| GRANTOR: FEDERAL NATIONAL MORT | | | | | | |
| GRANTEE: DOVER STEPHEN D & J | | | | | | |
| 1976/0164 | 4/24/2015 | CT | U | I | 18 | 100 |
| GRANTOR: CLERK OF COURT | | | | | | |
| GRANTEE: FEDERAL NATIONAL MO | | | | | | |

## BUILDING NOTES

## BUILDING DIMENSIONS

BAS=[YR=2016] W68 S17 FGR=[YR=2016] S28 E24 N24 W15 N4 W9$ E9 S4 E15 S12 E10 FOP=[YR=2016] S7 E22 N7 W22 $ E22 S7 E12 N40$ PTR= W90 STR=[YR=2016] W12 S4 FUS=[YR=2016] W3 S24 E12 N24 W9$ E12 N4$ E90$.

## EXTRA FEATURES

| LN | OB/XF CODE | DESCRIPTION | BLD | CAP | L | W | UNITS | UT | Adj R | ADJ UNIT PRICE | ORIG COND | YEAR ON | YEAR ACTUAL | Q | % COND | OB/XF MKT VALUE | NOTES |
|---|---|---|---|---|---|---|---|---|---|---|---|---|---|---|---|---|---|
| 1 | 0810 | CONCRETE A | 0 | 100 | 0 | 0 | 102.00 | SF | 6.50 | 6.50 | 100 | 1996 | 1996 | 3 | 73 | 484 | |
| 3 | 0810 | CONCRETE A | 0 | 100 | 64 | 3 | 192.00 | SF | 6.50 | 6.50 | 100 | 2016 | 2016 | 3 | 97 | 1,211 | |
| 4 | 0812 | CONCRETE C | 0 | 100 | 0 | 0 | 1,074.00 | SF | 4.00 | 4.00 | 100 | 2016 | 2016 | 3 | 97 | 4,167 | |
| 5 | 0810 | CONCRETE A | 0 | 100 | 16 | 18 | 288.00 | SF | 6.50 | 6.50 | 100 | 2016 | 2016 | 3 | 97 | 1,816 | |
| 6 | 1242 | WD DECK A | 0 | 100 | 0 | 0 | 550.00 | SF | 10.00 | 10.00 | 100 | 2020 | 2020 | 3 | 93 | 5,115 | |

## LAND DESCRIPTION

TOTAL OB/XF 12,793

| LN | USE CODE | CLS | LAND USE DESCRIPTION | CAP | RD | LOC ZONE | FRONT | DEPTH | TOT LND UTS | UNIT TYPE | DT | DPTH FACT | % COND | TOT ADJ | UNIT PRICE | ADJ UNIT PRICE | LAND VALUE | OTHER ADJUSTMENTS AND NOTES | YEAR | DENSITY | DECL | FRZ | YR | CONSRV |
|---|---|---|---|---|---|---|---|---|---|---|---|---|---|---|---|---|---|---|---|---|---|---|---|---|
| 1 | 000100 | C | SFR | 100 | | OR | 0.00 | 0.00 | 1.00 | LT | | 1.00 | 1.00 | 1.00 | 85,000.00 | 85,000.00 | 85,000 | | | | | | | |

REVIEW DATE 03/07/2022 BY KWA Total Acres: 0.00 Total Land Value: 85,000 Market: 0 Agricultural: 0 Common: 85,000 PRINTED 08/02/2023 BY SYS

BLOCK 1 LOT 1
IN OR 2001/599

**DOVER STEPHEN D & JENNIFER H**
95235 BIG OAK AVE
FERNANDINA BEACH, FL 32034

**2023**

**32-2N-28-0150-0001-0010**

## NASSAU COUNTY PROPERTY



## BUILDING CHARACTERISTICS

| ELEMENT | CD | CONSTRUCTION |
|---|---|---|
| Exterior Wall | 31 | HARDIE BRD 100 |
| Roof Structur | 03 | GABLE/HIP 100 |
| Roof Cover | 12 | MODULAR MT 100 |
| Interior Wall | 05 | DRYWALL 100 |
| Interior Floo | 03 | CONC FINSH 100 |
| Air Condition | 01 | NONE 100 |
| Heating Type | 01 | NONE 100 |
| Bedrooms | | 0 100 |
| Bathrooms | | 0 100 |
| Frame | 02 | WOOD FRAME 100 |
| Stories | 1. | 1. 100 |
| Units | | 0 100 |
| Occupancy | 00 | NONE 100 |
| Quality | 06 | Quality Level 06 |

DOR CODE 0100 SINGLE FAMILY
MAP NUM | MKT AREA 04
NEIGHBORHOOD/LOC 4007.00

| AREA TYPE | TOTAL GROSS AREA | PCT OF BASE | TOT ADJ AREA | SUBAREA MARKET VALUE |
|---|---|---|---|---|
| BAS | 576 | 100 | 576 | 16,111 |
| TOTALS | 576 | | 576 | 16,111 |

## MARKET ADJUSTMENTS

| TYPE | MDL | EFF. AREA | TOT ADJ PTS | EFF. BASE RATE | REPL. COST NEW | AYB | EYB | ECON | FNCT | | NORM | % COND |
|---|---|---|---|---|---|---|---|---|---|---|---|---|
| 6500 | 01 | 576 | 102.4650 | 35.86 | 20,655 | 1996 | 2006 | 0 | 0 | 0 | 22.00 | 78.00 |

2 GARAGE RES – 100% - 2017 Heated Area: 576 HX Base Yr 2017

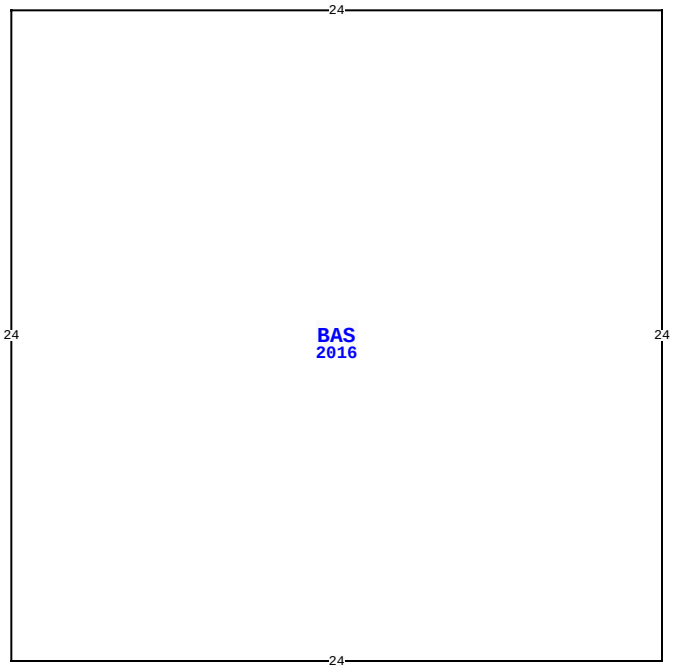


95235 BIG OAK AVE, FERNANDINA BEACH

| | | | |
|---|---|---|---|
| BLD DATE | | LGL DATE | 05/26/2023 MLU |
| XF DATE | | LAND DATE | |
| INC DATE | | AG DATE | |

## VALUATION SUMMARY

| | | |
|---|---|---|
| VALUATION BY | | STANDARD |
| Tax Group: 4 | Tax Dist: | |
| BUILDING MARKET VALUE | | 340,803 |
| TOTAL MARKET OB/XF VALUE | | 12,793 |
| TOTAL LAND VALUE - MARKET | | 85,000 |
| TOTAL MARKET VALUE | | 438,596 |
| SOH/AGL Deduction | | 221,546 |
| ASSESSED VALUE | | 217,050 |
| TOTAL EXEMPTION VALUE | HX HB | 50,000 |
| BASE TAXABLE VALUE | | 167,050 |
| TOTAL JUST VALUE | | 438,596 |
| NCON VALUE | | 0 |
| INCOME VALUE | | |
| PREVIOUS YEAR MKT VALUE | | 322,987 |

| PERMIT NUM | DESCRIPTION | AMT | ISSUED |
|---|---|---|---|
| | | | |

## SALES DATA

| OFF RECORD Number | DATE | TYPE INST | Q / U | V / I | RSN CD | SALE PRICE |
|---|---|---|---|---|---|---|
| 2001/0599 | 8/28/2015 | SW | U | I | 12 | 29,500 |
| GRANTOR: FEDERAL NATIONAL MORT | | | | | | |
| GRANTEE: DOVER STEPHEN D & J | | | | | | |
| 1976/0164 | 4/24/2015 | CT | U | I | 18 | 100 |
| GRANTOR: CLERK OF COURT | | | | | | |
| GRANTEE: FEDERAL NATIONAL MO | | | | | | |

## BUILDING NOTES

## BUILDING DIMENSIONS

BAS=[YR=2016] W24 S24 E24 N24$.

## EXTRA FEATURES

| L N | OB/XF CODE | DESCRIPTION | BLD | CAP | L | W | UNITS | UT | Adj R | ADJ UNIT PRICE | ORIG COND | YEAR ON | YEAR ACTUAL | Q | % COND | OB/XF MKT VALUE | NOTES |
|---|---|---|---|---|---|---|---|---|---|---|---|---|---|---|---|---|---|

## LAND DESCRIPTION

TOTAL OB/XF 0

| L N | USE CODE | CLS | LAND USE DESCRIPTION | CAP | R D | LOC ZONE | FRONT | DEPTH | TOT LND UTS | UNIT TYPE | D T | DPTH FACT | % COND | TOT ADJ | UNIT PRICE | ADJ UNIT PRICE | LAND VALUE | OTHER ADJUSTMENTS AND NOTES | YEAR | DENSITY | DECL | FRZ | YR | CONSRV |
|---|---|---|---|---|---|---|---|---|---|---|---|---|---|---|---|---|---|---|---|---|---|---|---|---|

REVIEW DATE 03/07/2022 BY KWA Total Acres: 0.00 Total Land Value: 85,000 Market: 0 Agricultural: 0 Common: 85,000 PRINTED 08/02/2023 BY SYS