LOT 34
ESMT PT OR 1397/1057
AMELIA BAY ESTATES PB 7/4

DESAI SHIRISH & VARSHA
95196 AMBERWOOD LN
FERNANDINA BEACH, FL 32034

2023

32-2N-28-005A-0034-0000

BUILDING CHARACTERISTICS

ELEMENT	CD	CONSTRUCTION
Exterior Wall	31	HARDIE BRD 100
Roof Structur	08	IRREGULAR 100
Roof Cover	03	COMP SHNGL 90
Roof Cover	12	MODULAR MT 10
Interior Wall	05	DRYWALL 100
Interior Floo	11	CLAY TILE 50
Interior Floo	14	CARPET 50
Air Condition	03	CENTRAL 100
Heating Type	04	AIR DUCTED 100
Bedrooms		4 100
Bathrooms		4.5 100
Frame	02	WOOD FRAME 100
Stories	2.	2. 100
Units		0 100
Occupancy	00	NONE 100
Quality	06	Quality Level 06
DOR CODE	0100	SINGLE FAMILY
MAP NUM		MKT AREA 04
NEIGHBORHOOD/LOC	4008.00	

AREA TYPE	TOTAL GROSS AREA	PCT OF BASE	TOT ADJ AREA	SUBAREA MARKET VALUE
BAS	2,198	100	2,198	358,833
FGR	838	55	461	75,260
FOP	60	30	18	2,938
FOP	334	30	100	16,325
FOP	355	30	106	17,304
FST	60	55	33	5,387
FUS	1,726	100	1,726	281,776
STP	30	10	3	490
STR	40	10	4	653
UST	224	45	101	16,489
TOTALS	5,865		4,750	775,456

MARKET ADJUSTMENTS

TYPE	MDL	EFF. AREA	TOT ADJ PTS	EFF. BASE RATE	REPL. COST NEW	AYB	EYB	ECON	FNCT		NORM	% COND
0500	01	4,750	116.3064	165.74	787,265	2018	2018	0	0	0	1.50	98.50

1 SFR CUST – 100% - 2022 Heated Area: 3924 HX Base Yr 2022

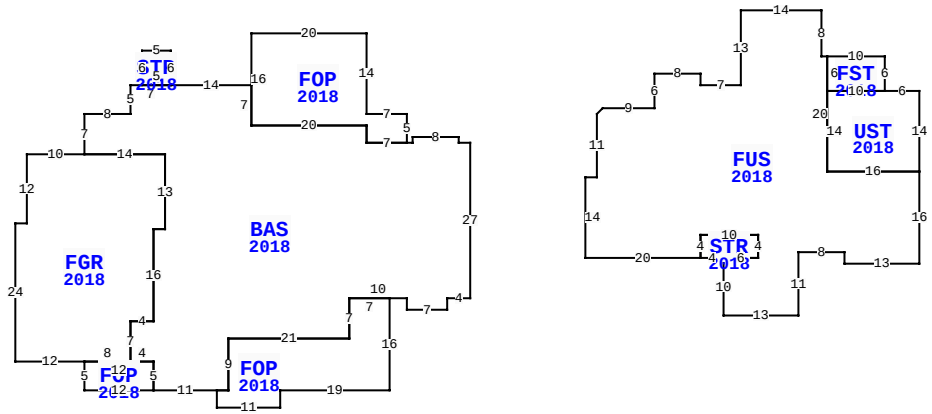

95196 AMBERWOOD LN, FERNANDINA BEACH

BLD DATE		LGL DATE	
XF DATE		LAND DATE	05/15/2023 MLU
INC DATE		AG DATE	

NASSAU COUNTY PROPERTY

PAGE 1 of 1 4

VALUATION SUMMARY

VALUATION BY		STANDARD
Tax Group: 4	Tax Dist:	
BUILDING MARKET VALUE		775,456
TOTAL MARKET OB/XF VALUE		29,794
TOTAL LAND VALUE - MARKET		75,000
TOTAL MARKET VALUE		880,250
SOH/AGL Deduction		112,907
ASSESSED VALUE		767,343
TOTAL EXEMPTION VALUE	HX HB	50,000
BASE TAXABLE VALUE		717,343
TOTAL JUST VALUE		880,250
NCON VALUE		0
INCOME VALUE		
PREVIOUS YEAR MKT VALUE		744,993

PERMIT NUM	DESCRIPTION	AMT	ISSUED
B1701663	CO ISSUED	0	10/15/2018
B1701663	NEW CONSTR	365,961	03/01/2017

SALES DATA

OFF RECORD Number	DATE	TYPE INST	Q U	V I	RSN CD	SALE PRICE
2502/1304	10/01/2021	WD	Q	I	01	950,000
GRANTOR: TOMBERLIN CHRISTOPHER						
GRANTEE: DESAI SHIRISH & VAR						
2034/0128	3/15/2016	WD	U	V	11	100
GRANTOR: TOMBERLIN ROBERT & VA						
GRANTEE: TOMBERLIN CHRISTOPH						

BUILDING NOTES

BUILDING DIMENSIONS

BAS=[YR=2018] W2 N1 W8 S1 W1 FOP=[YR=2018] N5 W7 N14 W20 S16 E20 S3 E7$ W7 N3 W20 N7 W14 STP=[YR=2018] N6 W5 S6 E5$ W7 S5 W8 S7 FGR=[YR=2018] W10 S12 W2 S24 E12 FOP=[YR=2018] S5 E12 N5 W12$ E8 N7 E4 N16 E2 N13 W14$ E14 S13 W2 S16 W4 S7 E4 S5 E11 FOP=[YR=2018] S3 E11 N3 E19 N16 W7 S7 W21 S9 W2$ E2 N9 E21 N7 E10 S2 E7 N2 E4 N27$ PTR= E20 S20 FUS=[YR=2018] N14 E2 N11 U1 R1 E9 N6 E8 S2 E7 N13 E14 S8 E1 FST=[YR=2018] E10 S6 UST=[YR=2018] E6 S14 W16 N14 E10 $ W10 N6$ S20 E16 S16 W13 N2 W8 S11 W13 N10 STR=[YR=2018] W4 N4 E10 S4 W6$ E6 N4 W10 S4 W20$ N20 W20$.

EXTRA FEATURES

LN	OB/XF CODE	DESCRIPTION	BLD	CAP	L	W	UNITS	UT	Adj R	ADJ UNIT PRICE	ORIG COND	YEAR ON	YEAR ACTUAL	Q	% COND	OB/XF MKT VALUE	NOTES
1	0500	FP-PRE FAB	0	100	0	0	1.00	UT	3,500.00	3,500.00	100	2018	2018	3	99	3,465	
2	0855	CONC PAVER	0	100	0	0	216.00	SF	10.00	10.00	100	2018	2018	3	98	2,117	
3	0855	CONC PAVER	0	100	0	0	2,117.00	SF	10.00	10.00	100	2018	2018	3	98	20,747	
4	0855	CONC PAVER	0	100	0	0	350.00	SF	10.00	10.00	100	2019	2019	3	99	3,465	

LAND DESCRIPTION

TOTAL OB/XF 29,794

LN	USE CODE	CLS	LAND USE DESCRIPTION	CAP	RD	LOC ZONE	FRONT	DEPTH	TOT LND UTS	UNIT TYPE	DT	DPTH FACT	% COND	TOT ADJ	UNIT PRICE	ADJ UNIT PRICE	LAND VALUE	OTHER ADJUSTMENTS AND NOTES	YEAR	DENSITY	DECL	FRZ	YR	CONSRV
1	000100	C	SFR	100		OR	0.00	0.00	1.00	LT		1.00	1.00	1.00	75,000.00	75,000.00	75,000							

REVIEW DATE 01/22/2019 BY KW Total Acres: 0.00 Total Land Value: 75,000 Market: 0 Agricultural: 0 Common: 75,000 PRINTED 08/02/2023 BY SYS