PT GOVT LOT 1 & PT OF SE1/4 OF
SEC 32-2N-25E IN OR 2117/1906

L & D REALTY CAPITAL LLC
PO BOX 313
CALLAHAN, FL 32011

2023

32-2N-25-0000-0009-0050

NASSAU COUNTY PROPERTY

BUILDING CHARACTERISTICS

ELEMENT	CD	CONSTRUCTION
Exterior Wall	15	CONC BLOCK 100
Roof Structur	04	WOOD TRUSS 100
Roof Cover	12	MODULAR MT 100
Interior Wall	05	DRYWALL 60
Interior Wall	04	PLYWOOD 40
Interior Floo	14	CARPET 70
Interior Floo	08	SHT VINYL 30
Ceiling	01	FIN.SUSPD 100
Air Condition	03	CENTRAL 100
Heating Type	04	AIR DUCTED 100
Fixtures		6 100
Frame	03	MASONRY 100
Story Height		9 100
RMS		10 100
Stories	1.	1. 100
Units		0 100
Occupancy	00	NONE 100
Quality	03	Quality Level 03
DOR CODE	1100	STORES, 1 STORY
MAP NUM		MKT AREA 08
NEIGHBORHOOD/LOC	1290.100	

AREA TYPE	TOTAL GROSS AREA	PCT OF BASE	TOT ADJ AREA	SUBAREA MARKET VALUE
AOF	160	100	160	11,491
AOF	530	100	530	38,062
BAS	972	100	972	69,804
CAN	210	30	63	4,525
TOTALS	1,872		1,725	123,881

MARKET ADJUSTMENTS

TYPE	MDL	EFF. AREA	TOT ADJ PTS	EFF. BASE RATE	REPL. COST NEW	AYB	EYB	ECON	FNCT		NORM	% COND
1101	04	1,725	98.0406	143.63	247,762	1942	1975	0	0	0	50.00	50.00

1 RETAILSTOR – 0% - 0 Heated Area: 1662 HX Base Yr

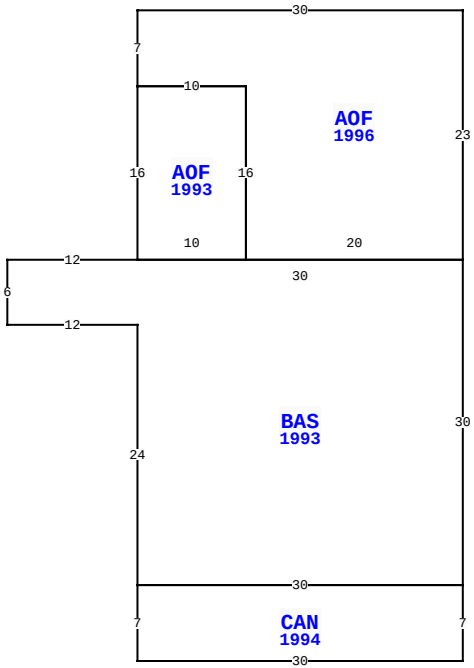

541669 US HWY 1, CALLAHAN

BLD DATE	04/27/2022 KK	LGL DATE	
XF DATE	04/27/2022 KK	LAND DATE	04/27/2022 KK
INC DATE		AG DATE	

VALUATION SUMMARY

VALUATION BY	STANDARD
Tax Group: 6	Tax Dist:
BUILDING MARKET VALUE	407,658
TOTAL MARKET OB/XF VALUE	77,632
TOTAL LAND VALUE - MARKET	266,250
TOTAL MARKET VALUE	751,540
SOH/AGL Deduction	218,746
ASSESSED VALUE	532,794
TOTAL EXEMPTION VALUE	0
BASE TAXABLE VALUE	532,794
TOTAL JUST VALUE	751,540
NCON VALUE	0
INCOME VALUE	
PREVIOUS YEAR MKT VALUE	484,358

PERMIT NUM	DESCRIPTION	AMT	ISSUED

SALES DATA

OFF RECORD Number	DATE	TYPE INST	Q U /	V I /	RSN CD	SALE PRICE
2518/1677	12/01/2021	WD	U	V	11	100
GRANTOR: BLACKSHEAR J DAWSON J						
GRANTEE: L & D REALTY CAPITA						
2117/1906	5/03/2017	WD	U	I	37	143,600
GRANTOR: B S C M INC						
GRANTEE: BLACKSHEAR J DAWSON						

BUILDING NOTES

BUILDING DIMENSIONS

AOF=[YR=1996] W30 S7 AOF=[YR=1993] S16 BAS=[YR=1993] W12 S6 E12 S24 CAN=[YR=1994] S7 E30 N7 W30 $ E30 N30 W30 $ E10 N16 W10 $ E10 S16 E20 N23 $.

EXTRA FEATURES

LN	OB/XF CODE	DESCRIPTION	BLD	CAP	L	W	UNITS	UT	Adj R	ADJ UNIT PRICE	ORIG COND	YEAR ON	YEAR ACTUAL	Q	% COND	OB/XF MKT VALUE	NOTES
2	0803	ASPHALT C	0	0	103	42	4,326.00	SF	1.00	1.00	100	2000	2000	3	50	2,163	
4	0812	CONCRETE C	0	0	0	0	4,337.00	SF	2.00	2.00	100	1995	1995	3	72	6,245	
10	4950	BOLLARD	0	0	0	0	6.00	UT	100.00	100.00	100	1980	1980	3	100	600	
12	0506	FLAGPOLE B	0	0	0	0	62.00	LF	100.00	100.00	100	1999	1999	3	20	1,240	
13	0402	CONC BUMPE	0	0	0	0	3.00	UT	25.00	25.00	100	1990	1990	3	70	53	
15	6001	ROLLUP DR	0	0	0	0	1.00	UT	400.00	400.00	100	1995	1995	3	20	80	
23	0473	VF 3 RAIL	0	0	0	0	125.00	LF	7.50	7.50	100	1997	1997	3	45	422	
25	0812	CONCRETE C	0	0	60	20	1,200.00	SF	4.00	4.00	100	2019	2019	3	99	4,752	
26	0803	ASPHALT C	0	0	0	0	14,280.00	SF	2.00	2.00	100	2021	2021	3	90	25,704	
27	0940	SHEDS/PORT	0	0	12	8	96.00	SF	30.00	30.00	100	2019	2019	3	90	2,592	

TOTAL OB/XF 43,851

LAND DESCRIPTION

LN	USE CODE	CLS	LAND USE DESCRIPTION	CAP	RD	LOC ZONE	FRONT	DEPTH	TOT LND UTS	UNIT TYPE	DT	DPTH FACT	% COND	TOT ADJ	UNIT PRICE	ADJ UNIT PRICE	LAND VALUE	OTHER ADJUSTMENTS AND NOTES	YEAR	DENSITY	DECL	FRZ	YR	CONSRV
1	001100	C	STORE 1FLR	0	0004	CI	0.00	0.00	213,000.00	SF		1.00	1.00	1.00	1.25	1.25	266,250							

REVIEW DATE 04/27/2022 BY KK Total Acres: 0.00 Total Land Value: 266,250 Market: 0 Agricultural: 0 Common: 266,250 PRINTED 08/02/2023 BY SYS

PT GOVT LOT 1 & PT OF SE1/4 OF
SEC 32-2N-25E IN OR 2117/1906

L & D REALTY CAPITAL LLC
PO BOX 313
CALLAHAN, FL 32011

2023

32-2N-25-0000-0009-0050

BUILDING CHARACTERISTICS

ELEMENT	CD	CONSTRUCTION
Exterior Wall	25	MOD METAL 100
Roof Structur	10	STEEL FRME 100
Roof Cover	12	MODULAR MT 100
Interior Wall	05	DRYWALL 100
Interior Floo	14	CARPET 70
Interior Floo	08	SHT VINYL 30
Ceiling	01	FIN.SUSPD 100
Air Condition	03	CENTRAL 100
Heating Type	04	AIR DUCTED 100
Fixtures		2 100
Frame	05	STEEL 100
Story Height		18 100
RMS		6 100
Stories	1.	1. 100
Units		0 100
Occupancy	00	NONE 100
Quality	03	Quality Level 03
DOR CODE	1100	STORES, 1 STORY
MAP NUM		MKT AREA 08
NEIGHBORHOOD/LOC	1290.100	

AREA TYPE	TOTAL GROSS AREA	PCT OF BASE	TOT ADJ AREA	SUBAREA MARKET VALUE
AOF	780	100	780	93,950
BAS	1,000	100	1,000	120,449
CAN	160	30	48	5,782
UST	1,320	40	528	63,597
TOTALS	3,260		2,356	283,777

MARKET ADJUSTMENTS

TYPE	MDL	EFF. AREA	TOT ADJ PTS	EFF. BASE RATE	REPL. COST NEW	AYB	EYB	ECON	FNCT		NORM	% COND
1101	04	2,356	114.1938	167.29	394,135	1995	1995	0	0	0	28.00	72.00

2 RETAILSTOR – 0% - 0 Heated Area: 1780 HX Base Yr

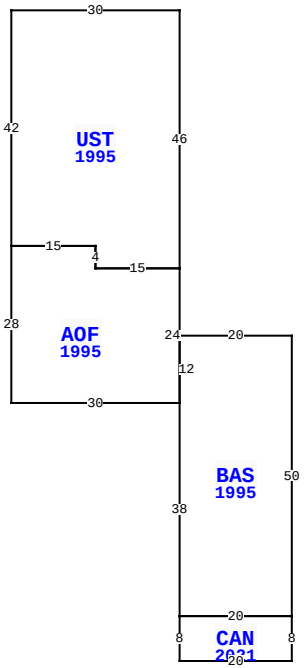

541669 US HWY 1, CALLAHAN

BLD DATE	04/27/2022	KK	LGL DATE	
XF DATE	04/27/2022	KK	LAND DATE	04/27/2022 KK
INC DATE			AG DATE	

NASSAU COUNTY PROPERTY

PAGE 2 of 2 6

VALUATION SUMMARY

VALUATION BY	STANDARD
Tax Group: 6	Tax Dist:
BUILDING MARKET VALUE	407,658
TOTAL MARKET OB/XF VALUE	77,632
TOTAL LAND VALUE - MARKET	266,250
TOTAL MARKET VALUE	751,540
SOH/AGL Deduction	218,746
ASSESSED VALUE	532,794
TOTAL EXEMPTION VALUE	0
BASE TAXABLE VALUE	532,794
TOTAL JUST VALUE	751,540
NCON VALUE	0
INCOME VALUE	
PREVIOUS YEAR MKT VALUE	484,358

PERMIT NUM	DESCRIPTION	AMT	ISSUED

SALES DATA

OFF RECORD Number	DATE	TYPE INST	Q U	V I	RSN CD	SALE PRICE
2518/1677	12/01/2021	WD	U	V	11	100
GRANTOR: BLACKSHEAR J DAWSON J						
GRANTEE: L & D REALTY CAPITA						
2117/1906	5/03/2017	WD	U	I	37	143,600
GRANTOR: B S C M INC						
GRANTEE: BLACKSHEAR J DAWSON						

BUILDING NOTES

BUILDING DIMENSIONS

UST=[YR=1995] W30 S42 AOF=[YR=1995] S28 E30 BAS=[YR=1995] S38 CAN=[YR=2021] S8 E20 N8 W20$ E20 N50 W20 S12$ N24 W15 N4 W15$ E15 S4 E15 N46 $.

EXTRA FEATURES

LN	OB/XF CODE	DESCRIPTION	BLD	CAP	L	W	UNITS	UT	Adj R	ADJ UNIT PRICE	ORIG COND	YEAR ON	YEAR ACTUAL	Q	% COND	OB/XF MKT VALUE	NOTES
28	0940	SHEDS/PORT	0	0	9	4	36.00	SF	30.00	30.00	100	2020	2020	3	93	1,004	
29	0819	CONC 12"	0	0	0	0	680.00	SF	9.50	9.50	100	2021	2021	3	100	6,460	
30	0940	SHEDS/PORT	0	0	7	4	28.00	SF	30.00	30.00	100	2021	2021	3	97	815	
31	0972	ST LGHT UN	0	0	0	0	1.00	UT	1,265.00	1,265.00	100	2021	2021	3	99	1,252	
32	1091	T SCALE 30	0	0	0	0	1.00	UT	25,000.00	25,000.00	100	2021	2021	3	97	24,250	

LAND DESCRIPTION

TOTAL OB/XF 33,781

LN	USE CODE	CLS	LAND USE DESCRIPTION	CAP	RD	LOC ZONE	FRONT	DEPTH	TOT LND UTS	UNIT TYPE	DT	DPTH FACT	% COND	TOT ADJ	UNIT PRICE	ADJ UNIT PRICE	LAND VALUE	OTHER ADJUSTMENTS AND NOTES	YEAR	DENSITY	DECL	FRZ	YR	CONSRV

REVIEW DATE 04/27/2022 BY KK Total Acres: 0.00 Total Land Value: 266,250 Market: 0 Agricultural: 0 Common: 266,250 PRINTED 08/02/2023 BY SYS