PT OR 2439/1330
ESMT OR 545/1212

MCANINCH TERRIE L
541727 US HIGHWAY 1
CALLAHAN, FL 32011

2023

32-2N-25-0000-0003-0010

NASSAU COUNTY PROPERTY

BUILDING CHARACTERISTICS

ELEMENT	CD	CONSTRUCTION
Exterior Wall	20	FACE BRICK 100
Roof Structur	03	GABLE/HIP 100
Roof Cover	03	COMP SHNGL 100
Interior Wall	05	DRYWALL 100
Interior Floo	14	CARPET 90
Interior Floo	08	SHT VINYL 10
Air Condition	03	CENTRAL 100
Heating Type	04	AIR DUCTED 100
Bedrooms		3 100
Bathrooms		2 100
Frame	02	WOOD FRAME 100
Stories	1.	1. 100
Units		0 100
BUD8 Adjustme	06	DIST 1D 100
Occupancy	00	NONE 100
Quality	03	Quality Level 03
DOR CODE	0100	SINGLE FAMILY
MAP NUM		MKT AREA 08
NEIGHBORHOOD/LOC	8001.00	

AREA TYPE	TOTAL GROSS AREA	PCT OF BASE	TOT ADJ AREA	SUBAREA MARKET VALUE
BAS	2,542	100	2,542	159,101
FOP	50	30	15	939
PTO	266	5	13	814
UDU	30	55	16	1,001
UDU	225	55	124	7,761
TOTALS	3,113		2,710	169,616

MARKET ADJUSTMENTS

TYPE	MDL	EFF. AREA	TOT ADJ PTS	EFF. BASE RATE	REPL. COST NEW	AYB	EYB	ECON	FNCT		NORM	% COND
0100	01	2,710	101.7600	91.84	248,886	1962	1975	0	0	0	31.85	68.15

1 SINGLE FAM – 0% - 2022 Heated Area: 2542 HX Base Yr

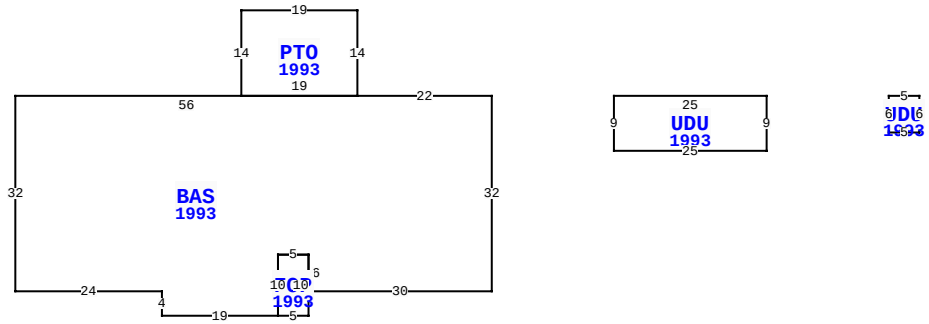

44076 WOODSIDE LN, CALLAHAN

BLD DATE		LGL DATE	
XF DATE		LAND DATE	
INC DATE		AG DATE	

VALUATION SUMMARY

VALUATION BY	STANDARD
Tax Group: 6	Tax Dist:
BUILDING MARKET VALUE	169,616
TOTAL MARKET OB/XF VALUE	16,084
TOTAL LAND VALUE - MARKET	35,000
TOTAL MARKET VALUE	220,700
SOH/AGL Deduction	17,865
ASSESSED VALUE	202,835
TOTAL EXEMPTION VALUE	0
BASE TAXABLE VALUE	202,835
TOTAL JUST VALUE	220,700
NCON VALUE	0
INCOME VALUE	
PREVIOUS YEAR MKT VALUE	184,395

PERMIT NUM	DESCRIPTION	AMT	ISSUED
8265	REPAIR/RRF	1,900	07/24/1992

SALES DATA

OFF RECORD Number	DATE	TYPE INST	Q / U	V / I	RSN CD	SALE PRICE
2638/1045	12/01/2021	WD	U	I	11	100
GRANTOR: CARTER SARA						
GRANTEE: MCANINCH TERRIE L						
2518/1480	12/01/2021	WD	P	I	98	230,000
GRANTOR: CARTER SARA						
GRANTEE: MCANINCH TERRIE L						

BUILDING NOTES

BUILDING DIMENSIONS

BAS=[YR=1993] W22 PTO=[YR=1993] N14 W19 S14 E19$ W56 S32 E24 S4 E19 FOP=[YR=1993] E5 N10 W5 S10$ N10 E5 S6 E30 N32$ PTR=E20 UDU=[YR=1993] E25 S9 W25 N9$ W20$ PTR= E65 UDU=[YR=1993] E5 S6 W5 N6$ W65$.

EXTRA FEATURES

LN	OB/XF CODE	DESCRIPTION	BLD	CAP	L	W	UNITS	UT	Adj R	ADJ UNIT PRICE	ORIG COND	YEAR ON	YEAR ACTUAL	Q	% COND	OB/XF MKT VALUE	NOTES
1	0812	CONCRETE C	0	0	0	0	1,530.00	SF	4.00	4.00	100	1962	1962	3	20	1,224	
2	0511	GARAGE CB-	0	0	32	25	800.00	SF	40.00	40.00	100	1979	1979	3	32.5	10,400	
3	0940	SHEDS/PORT	0	0	0	0	440.00	SF	30.00	30.00	100	1975	1975	3	20	2,640	
4	0350	CARPORT WD	0	0	35	20	700.00	SF	13.00	13.00	100	1962	1962	3	20	1,820	

LAND DESCRIPTION

TOTAL OB/XF 16,084

LN	USE CODE	CLS	LAND USE DESCRIPTION	CAP	RD	LOC ZONE	FRONT	DEPTH	TOT LND UTS	UNIT TYPE	DT	DPTH FACT	% COND	TOT ADJ	UNIT PRICE	ADJ UNIT PRICE	LAND VALUE	OTHER ADJUSTMENTS AND NOTES	YEAR	DENSITY	DECL	FRZ	YR	CONSRV
1	000100	C	SFR	0		OR	0.00	0.00	1.00	AC		1.00	1.00	1.00	35,000.00	35,000.00	35,000							

REVIEW DATE 01/06/2023 BY KWA Total Acres: 1.00 Total Land Value: 35,000 Market: 0 Agricultural: 0 Common: 35,000 PRINTED 08/02/2023 BY SYS