IN OR 2188/597

VASILIADES NICHOLAS & JENNIFER
541758 US HWY 1
CALLAHAN, FL 32011

2023

32-2N-25-0000-0002-0030

BUILDING CHARACTERISTICS

ELEMENT	CD	CONSTRUCTION
Exterior Wall	07	ASB SHNGLE 100
Roof Structur	03	GABLE/HIP 100
Roof Cover	03	COMP SHNGL 100
Interior Wall	05	DRYWALL 100
Interior Floo	12	HARDWOOD 90
Interior Floo	11	CLAY TILE 10
Air Condition	03	CENTRAL 100
Heating Type	02	CONVECTION 100
Bedrooms		7 100
Bathrooms		5 100
Frame	02	WOOD FRAME 100
Stories	2.	2. 100
Units		0 100
BUD8 Adjustme	06	DIST 1D 100
Occupancy	00	NONE 100
Quality	04	Quality Level 04

DOR CODE	0100	SINGLE FAMILY	
MAP NUM		MKT AREA	08
NEIGHBORHOOD/LOC	8001.00		

AREA TYPE	TOTAL GROSS AREA	PCT OF BASE	TOT ADJ AREA	SUBAREA MARKET VALUE
BAS	1,575	100	1,575	107,984
FGR	725	55	399	27,356
FOP	24	30	7	480
FOP	210	30	63	4,319
FST	348	55	191	13,095
FUS	1,575	100	1,575	107,984
TOTALS	4,457		3,810	261,218

MARKET ADJUSTMENTS

TYPE	MDL	EFF. AREA	TOT ADJ PTS	EFF. BASE RATE	REPL. COST NEW	AYB	EYB	ECON	FNCT		NORM	% COND
0100	01	3,810	95.2560	85.97	327,546	1950	1995	0	0	0	20.25	79.75

1 SINGLE FAM – 100% - 2019 Heated Area: 3150 HX Base Yr 2019

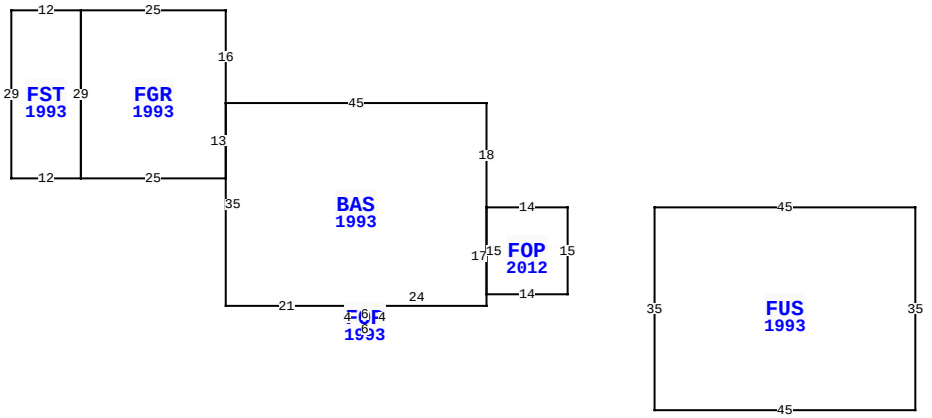

541758 US HWY 1, CALLAHAN

BLD DATE		LGL DATE	
XF DATE		LAND DATE	
INC DATE		AG DATE	

NASSAU COUNTY PROPERTY

PAGE 1 of 1 6

VALUATION SUMMARY

VALUATION BY		STANDARD
Tax Group: 6	Tax Dist:	
BUILDING MARKET VALUE		261,218
TOTAL MARKET OB/XF VALUE		7,123
TOTAL LAND VALUE - MARKET		31,850
TOTAL MARKET VALUE		300,191
SOH/AGL Deduction		95,025
ASSESSED VALUE		205,166
TOTAL EXEMPTION VALUE	HX HB	50,000
BASE TAXABLE VALUE		155,166
TOTAL JUST VALUE		300,191
NCON VALUE		0
INCOME VALUE		
PREVIOUS YEAR MKT VALUE		257,436

PERMIT NUM	DESCRIPTION	AMT	ISSUED
R002627	REPAIR/RRF	6,000	07/01/2000

SALES DATA

OFF RECORD Number	DATE	TYPE INST	Q / U	V / I	RSN CD	SALE PRICE
2188/0597	4/03/2018	WD	Q	I	01	260,000
GRANTOR: HENG MARC L & RENEE M						
GRANTEE: VASILIADES NICHOLAS						
2065/0298	8/05/2016	WD	Q	I	01	261,200
GRANTOR: LAMAR JEAN B & BRUCE						
GRANTEE: HENG MARC L & RENEE						

BUILDING NOTES

BUILDING DIMENSIONS

FOP=[YR=2012] W14 BAS=[YR=1993] N18 W45 FGR=[YR=1993] N16 W25
FST=[YR=1993] W12 S29 E12 N29 $ S29 E25 N13 $ S35 E21
FOP=[YR=1993] S4 E6 N4 W6 $ E24 N17 $ S15 E14 N15 $ PTR= E15
FUS=[YR=1993] E45 S35 W45 N35 $ W15 $.

EXTRA FEATURES

LN	OB/XF CODE	DESCRIPTION	BLD	CAP	L	W	UNITS	UT	Adj R	ADJ UNIT PRICE	ORIG COND	YEAR ON	YEAR ACTUAL	Q	% COND	OB/XF MKT VALUE	NOTES
1	0462	ST/AL FNC	0	100	0	0	848.00	SF	10.00	10.00	100	2016	2016	3	84	7,123	

LAND DESCRIPTION

TOTAL OB/XF 7,123

LN	USE CODE	CLS	LAND USE DESCRIPTION	CAP	RD	LOC ZONE	FRONT	DEPTH	TOT LND UTS	UNIT TYPE	DT	DPTH FACT	% COND	TOT ADJ	UNIT PRICE	ADJ UNIT PRICE	LAND VALUE	OTHER ADJUSTMENTS AND NOTES	YEAR	DENSITY	DECL	FRZ	YR	CONSRV
1	000100	C	SFR	100	0004	OR	0.00	0.00	0.91	AC		1.00	1.00	1.00	35,000.00	35,000.00	31,850							

REVIEW DATE 05/11/2022 BY KBA Total Acres: 0.91 Total Land Value: 31,850 Market: 0 Agricultural: 0 Common: 31,850 PRINTED 08/02/2023 BY SYS