BLOCK 1 PT OF LOTS 30 & 31
IN OR 1238/325
ESMT PT OR 1239/696

WIGGINS ADAM P & JENNIFER D
44221 COMMANCHEE ROAD
CALLAHAN, FL 32011-7377

2023

31-2N-25-2920-0001-0303

BUILDING CHARACTERISTICS

ELEMENT	CD	CONSTRUCTION
Exterior Wall	20	FACE BRICK 100
Roof Structur	03	GABLE/HIP 100
Roof Cover	03	COMP SHNGL 100
Interior Wall	05	DRYWALL 100
Interior Floo	14	CARPET 70
Interior Floo	11	CLAY TILE 30
Air Condition	03	CENTRAL 100
Heating Type	04	AIR DUCTED 100
Bedrooms		3 100
Bathrooms		2 100
Frame	02	WOOD FRAME 100
Stories	1.5	1.5 100
Units		0 100
Occupancy	00	NONE 100
Quality	01	Quality Level 01
DOR CODE	0100	SINGLE FAMILY
MAP NUM		MKT AREA 08
NEIGHBORHOOD/LOC	8001.00	

AREA TYPE	TOTAL GROSS AREA	PCT OF BASE	TOT ADJ AREA	SUBAREA MARKET VALUE
BAS	2,129	100	2,129	209,536
FGR	552	55	304	29,919
FOP	163	30	49	4,822
FOP	296	30	89	8,759
PTO	8	5	0	0
PTO	8	5	0	0
PTO	14	5	1	99
UUS	288	50	144	14,172
TOTALS	3,458		2,716	267,307

MARKET ADJUSTMENTS

TYPE	MDL	EFF. AREA	TOT ADJ PTS	EFF. BASE RATE	REPL. COST NEW	AYB	EYB	ECON	FNCT		NORM	% COND
0900	01	2,716	95.8176	113.78	309,026	2004	2004	0	0	0	13.50	86.50

1 SNGL FAM – 100% - 2006 Heated Area: 2129 HX Base Yr 2006

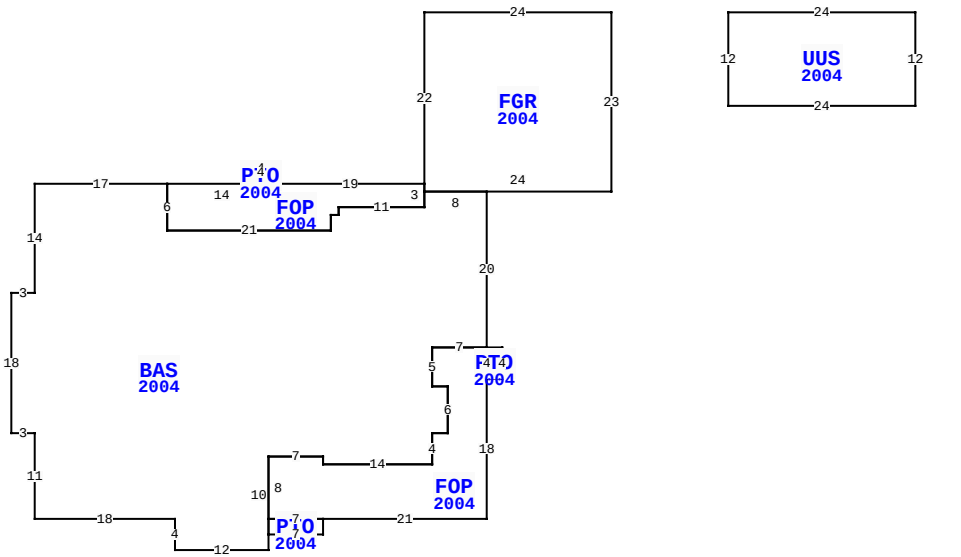

44221 COMMANCHEE RD, CALLAHAN

BLD DATE		LGL DATE	
XF DATE		LAND DATE	05/19/2023 MLU
INC DATE		AG DATE	

NASSAU COUNTY PROPERTY

PAGE 1 of 1 6

VALUATION SUMMARY

VALUATION BY		STANDARD
Tax Group: 6	Tax Dist:	
BUILDING MARKET VALUE		267,307
TOTAL MARKET OB/XF VALUE		5,121
TOTAL LAND VALUE - MARKET		80,000
TOTAL MARKET VALUE		352,428
SOH/AGL Deduction		176,164
ASSESSED VALUE		176,264
TOTAL EXEMPTION VALUE	HX HB	50,000
BASE TAXABLE VALUE		126,264
TOTAL JUST VALUE		352,428
NCON VALUE		0
INCOME VALUE		
PREVIOUS YEAR MKT VALUE		296,596

PERMIT NUM	DESCRIPTION	AMT	ISSUED
B13174	NEW CONSTR	179,518	07/12/2004
P6392	NEW CONSTR	4,000	07/12/2004

SALES DATA

OFF RECORD Number	DATE	TYPE INST	Q U	V I	RSN CD	SALE PRICE
1238/0325	6/16/2004	WD	U	V	06	100
GRANTOR: WESCH DEBORAH S						
GRANTEE: WIGGINS ADAM P & JE						
1238/0323	6/16/2004	QC	U	V	01	100
GRANTOR: GRIFFIN MAXIE LOU						
GRANTEE: WESCH DEBORAH S						

BUILDING NOTES

BUILDING DIMENSIONS

FGR=[YR=2004] W24 S22 FOP=[YR=2004] W19 PTO=[YR=2004] N2 W4 S2 E4 $ W14 S6 E21 N2 E1 N1 E11 N3 $ S1 BAS=[YR=2004] S2 W11 S1 W1 S2 W21 N6 W17 S14 W3 S18 E3 S11 E18 S4 E12 N2 PTO=[YR=2004] E7 N2 FOP=[YR=2004] E21 N18 PTO=[YR=2004] E2 N4 W2 S4 $ N4 W7 S5 E2 S6 W2 S4 W14 N1 W7 S8 E7 $ W7 S2 $ N10 E7 S1 E14 N4 E2 N6 W2 N5 E7 N20 W8 $ E24 N23 $ PTR= E15 UUS=[YR=2004] E24 S12 W24 N12 $ W15 $.

EXTRA FEATURES

LN	OB/XF CODE	DESCRIPTION	BLD	CAP	L	W	UNITS	UT	Adj R	ADJ UNIT PRICE	ORIG COND	YEAR ON	YEAR ACTUAL	Q	% COND	OB/XF MKT VALUE	NOTES
1	0811	CONCRETE B	0	100	0	0	811.00	SF	5.20	5.20	100	2005	2005	3	87	3,669	
2	0681	POLE SHED	0	100	24	12	288.00	SF	10.50	10.50	100	2006	2006	3	48	1,452	

LAND DESCRIPTION

TOTAL OB/XF 5,121

LN	USE CODE	CLS	LAND USE DESCRIPTION	CAP	RD	LOC ZONE	FRONT	DEPTH	TOT LND UTS	UNIT TYPE	DT	DPTH FACT	% COND	TOT ADJ	UNIT PRICE	ADJ UNIT PRICE	LAND VALUE	OTHER ADJUSTMENTS AND NOTES	YEAR	DENSITY	DECL	FRZ	YR	CONSRV
1	000115	C	SFR ACRES	100	0007	OR	0.00	0.00	5.00	AC		1.00	1.00	1.00	16,000.00	16,000.00	80,000							

REVIEW DATE 06/02/2017 BY KBX Total Acres: 5.00 Total Land Value: 80,000 Market: 0 Agricultural: 0 Common: 80,000 PRINTED 08/02/2023 BY SYS