PT OF LOT 63 (S-1)
IN OR 1496/1057
CORNWALL SURVEY

HERN JOHN R & HEATHER
25068 BLUE JAY WAY
HILLIARD, FL 32046

2023

30-3N-24-2020-0063-0010

BUILDING CHARACTERISTICS

ELEMENT	CD	CONSTRUCTION
Exterior Wall	20	FACE BRICK 100
Roof Structur	03	GABLE/HIP 100
Roof Cover	03	COMP SHNGL 100
Interior Wall	05	DRYWALL 100
Interior Floo	13	LVT/LAMNT 60
Interior Floo	14	CARPET 40
Air Condition	03	CENTRAL 100
Heating Type	04	AIR DUCTED 100
Bedrooms		3 100
Bathrooms		2 100
Frame	02	WOOD FRAME 100
Stories	1.	1. 100
Units		0 100
Occupancy	00	NONE 100
Quality	06	Quality Level 06
DOR CODE	0100	SINGLE FAMILY
MAP NUM		MKT AREA 09
NEIGHBORHOOD/LOC	9001.00	

AREA TYPE	TOTAL GROSS AREA	PCT OF BASE	TOT ADJ AREA	SUBAREA MARKET VALUE
BAS	2,003	100	2,003	201,367
FGR	525	55	289	29,054
FOP	42	30	13	1,307
FSP	196	40	78	7,841
UDU	187	55	103	10,354
TOTALS	2,953		2,486	249,925

MARKET ADJUSTMENTS

TYPE	MDL	EFF. AREA	TOT ADJ PTS	EFF. BASE RATE	REPL. COST NEW	AYB	EYB	ECON	FNCT		NORM	% COND
0100	01	2,486	119.4528	107.81	268,016	2008	2013	0	0	0	6.75	93.25

1 SINGLE FAM – 100% - 2009 Heated Area: 2003 HX Base Yr 2009

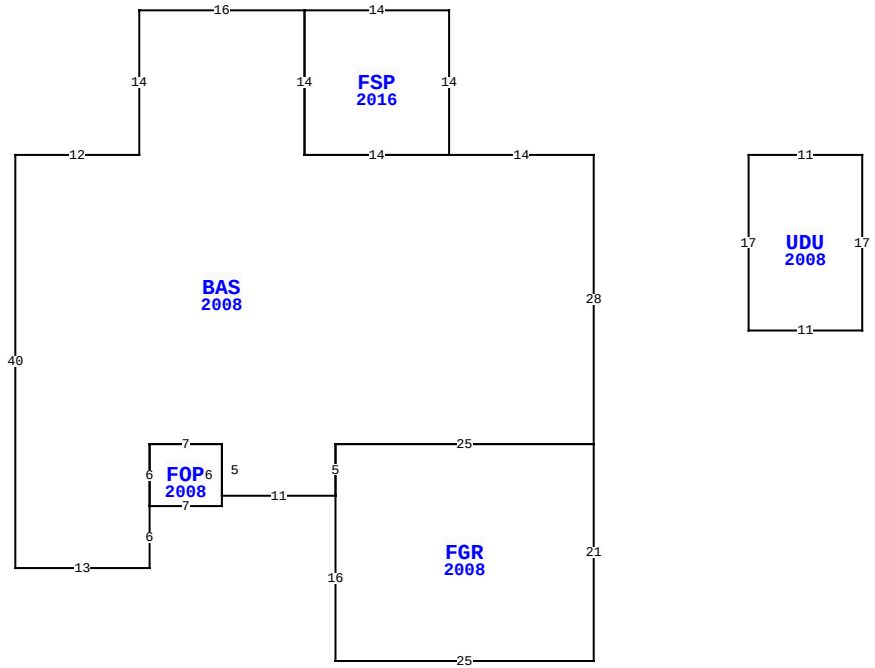

25068 BLUE JAY WAY, HILLIARD

BLD DATE	12/23/2008 JH	LGL DATE	
XF DATE		LAND DATE	06/13/2023 MLU
INC DATE		AG DATE	

NASSAU COUNTY PROPERTY

PAGE 1 of 1 4

VALUATION SUMMARY

VALUATION BY		STANDARD
Tax Group: 4	Tax Dist:	
BUILDING MARKET VALUE		249,925
TOTAL MARKET OB/XF VALUE		29,490
TOTAL LAND VALUE - MARKET		78,000
TOTAL MARKET VALUE		357,415
SOH/AGL Deduction		169,230
ASSESSED VALUE		188,185
TOTAL EXEMPTION VALUE	HX HB	50,000
BASE TAXABLE VALUE		138,185
TOTAL JUST VALUE		357,415
NCON VALUE		0
INCOME VALUE		
PREVIOUS YEAR MKT VALUE		301,797

PERMIT NUM	DESCRIPTION	AMT	ISSUED
19002177	REPAIR/RRF	11,468	03/04/2019
B166513	GARAGE	0	12/01/2016
M13531	MECH OTHER	0	12/01/2007
C20500	CO ISSUED	165,000	09/01/2007
B20500	NEW CONSTR	165,000	09/01/2007
E20031	ELEC OTHER	3,500	09/01/2007

SALES DATA

OFF RECORD Number	DATE	TYPE INST	Q / U	V / I	RSN CD	SALE PRICE
1496/1057	5/02/2007	WD	Q	V		46,600
GRANTOR: WILKINSON JOHN M						
GRANTEE: HERN JOHN R & HEATH						
1178/0767	10/06/2003	WD	U	V	06	16,332
GRANTOR: CCRC WOODLANDS LTD						
GRANTEE: WILKINSON JOHN M						

BUILDING NOTES

BUILDING DIMENSIONS

BAS=[YR=2008] W14 FSP=[YR=2016] N14 W14 S14 E14$ W14 N14 W16 S14 W12 S40E13 N6 FOP=[YR=2008] E7 N6 W7 S6 $ N6 E7 S5 E11 FGR=[YR=2008] S16 E25 N21 W25 S5$ N5 E25 N28$ PTR= E15 UDU=[YR=2008] E11 S17 W11 N17$ W15$.

EXTRA FEATURES

LN	OB/XF CODE	DESCRIPTION	BLD	CAP	L	W	UNITS	UT	Adj R	ADJ UNIT PRICE	ORIG COND	YEAR ON	YEAR ACTUAL	Q	% COND	OB/XF MKT VALUE	NOTES
1	0811	CONCRETE B	0	100	0	0	836.00	SF	5.20	5.20	100	2008	2008	3	90	3,912	
2	0510	GARAGE WD-	0	100	35	24	840.00	SF	35.00	35.00	100	2017	2017	3	87	25,578	

LAND DESCRIPTION

TOTAL OB/XF 29,490

LN	USE CODE	CLS	LAND USE DESCRIPTION	CAP	RD	LOC ZONE	FRONT	DEPTH	TOT LND UTS	UNIT TYPE	DT	DPTH FACT	% COND	TOT ADJ	UNIT PRICE	ADJ UNIT PRICE	LAND VALUE	OTHER ADJUSTMENTS AND NOTES	YEAR	DENSITY	DECL	FRZ	YR	CONSRV
1	000115	C	SFR ACRES	100	0004	OR	0.00	0.00	2.60	AC		1.00	1.00	1.00	30,000.00	30,000.00	78,000							

REVIEW DATE 05/17/2019 BY TWX Total Acres: 2.60 Total Land Value: 78,000 Market: 0 Agricultural: 0 Common: 78,000 PRINTED 08/02/2023 BY SYS