PT OF SE1/4
IN OR 2397/433
PARCELS 7-21 & 7-22

**JOHNSON NICHOLAS B & MAYKAYLA**
26169 WILLIE HODGES RD
HILLIARD, FL 32046

**2023**

**30-3N-24-0000-0007-0210**

# NASSAU COUNTY PROPERTY



## BUILDING CHARACTERISTICS

| ELEMENT | CD | CONSTRUCTION |
|---|---|---|
| Exterior Wall | 20 | FACE BRICK 60 |
| Exterior Wall | 30 | VINYL 40 |
| Roof Structur | 08 | IRREGULAR 100 |
| Roof Cover | 03 | COMP SHNGL 100 |
| Interior Wall | 05 | DRYWALL 80 |
| Interior Wall | 06 | CUST PANEL 20 |
| Interior Floo | 12 | HARDWOOD 50 |
| Interior Floo | 14 | CARPET 50 |
| Air Condition | 03 | CENTRAL 100 |
| Heating Type | 04 | AIR DUCTED 100 |
| Bedrooms | | 5 100 |
| Bathrooms | | 3.5 100 |
| Frame | 02 | WOOD FRAME 100 |
| Stories | 2. | 2. 100 |
| Units | | 0 100 |
| Occupancy | 00 | NONE 100 |
| Quality | 04 | Quality Level 04 |
| DOR CODE | 0100 | SINGLE FAMILY |
| MAP NUM | | MKT AREA 09 |
| NEIGHBORHOOD/LOC | 9001.00 | |

| AREA TYPE | TOTAL GROSS AREA | PCT OF BASE | TOT ADJ AREA | SUBAREA MARKET VALUE |
|---|---|---|---|---|
| BAS | 2,212 | 100 | 2,212 | 245,055 |
| BAS | 117 | 100 | 117 | 12,962 |
| FOP | 273 | 30 | 82 | 9,085 |
| FOP | 279 | 30 | 84 | 9,306 |
| FUS | 1,224 | 100 | 1,224 | 135,600 |
| UOP | 30 | 20 | 6 | 665 |
| TOTALS | 4,135 | | 3,725 | 412,672 |

## MARKET ADJUSTMENTS

| TYPE | MDL | EFF. AREA | TOT ADJ PTS | EFF. BASE RATE | REPL. COST NEW | AYB | EYB | ECON | FNCT | | NORM | % COND |
|---|---|---|---|---|---|---|---|---|---|---|---|---|
| 0900 | 01 | 3,725 | 106.3125 | 126.25 | 470,281 | 1998 | 2003 | 0 | 0 | 0 | 12.25 | 87.75 |

1 SNGL FAM – 100% - 2021 Heated Area: 3553 HX Base Yr 2021

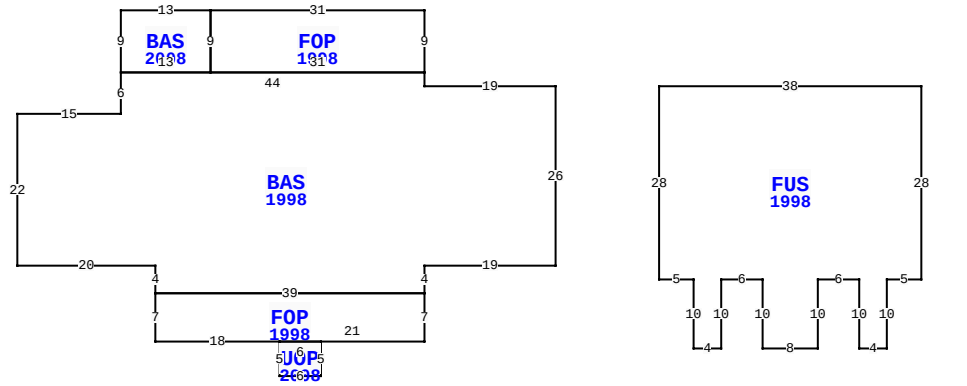


26169 WILLIE HODGES RD, HILLIARD

| | | | |
|---|---|---|---|
| BLD DATE | | LGL DATE | |
| XF DATE | | LAND DATE | 06/16/2023 MLU |
| INC DATE | | AG DATE | |

## VALUATION SUMMARY

| | | |
|---|---|---|
| VALUATION BY | | STANDARD |
| Tax Group: 4 | Tax Dist: | |
| BUILDING MARKET VALUE | | 498,166 |
| TOTAL MARKET OB/XF VALUE | | 16,252 |
| TOTAL LAND VALUE - MARKET | | 108,490 |
| TOTAL MARKET VALUE | | 622,908 |
| SOH/AGL Deduction | | 143,987 |
| ASSESSED VALUE | | 478,921 |
| TOTAL EXEMPTION VALUE | HX HB | 50,000 |
| BASE TAXABLE VALUE | | 428,921 |
| TOTAL JUST VALUE | | 622,908 |
| NCON VALUE | | 0 |
| INCOME VALUE | | |
| PREVIOUS YEAR MKT VALUE | | 538,552 |

| PERMIT NUM | DESCRIPTION | AMT | ISSUED |
|---|---|---|---|
| 19004239 | REPAIR/RRF | 5,500 | 04/25/2019 |
| R1413928 | REPAIR/RRF | 26,210 | 05/01/2014 |
| M13457 | MECH OTHER | 0 | 11/01/2007 |
| E0617514 | ELEC OTHER | 50 | 06/01/2006 |
| P0611247 | OTHER | 0 | 06/01/2006 |
| B17689 | NEW CONSTR | 82,764 | 05/01/2006 |

## SALES DATA

| OFF RECORD Number | DATE | TYPE INST | Q / U | V / I | RSN CD | SALE PRICE |
|---|---|---|---|---|---|---|
| 2397/0433 | 9/28/2020 | WD | Q | I | 01 | 520,000 |
| GRANTOR: DAVIS DONNIE C & LOUI | | | | | | |
| GRANTEE: JOHNSON NICHOLAS B | | | | | | |
| 0896/0219 | 8/20/1999 | QC | U | I | 07 | 100 |
| GRANTOR: DAVIS DONNIE ETAL | | | | | | |
| GRANTEE: DAVIS DONNIE & LOUI | | | | | | |

## BUILDING NOTES

## BUILDING DIMENSIONS

BAS=[YR=1998] W19 N2 FOP=[YR=1998] N9 W31 BAS=[YR=2008] W13 S9 E13 N9$ S9 E31$ W44 S6 W15 S22 E20 S4 FOP=[YR=1998] S7 E18 UOP=[YR=2008] S5 E6 N5 W6$ E21 N7 W39$ E39 N4 E19 N26$ PTR=E15 FUS=[YR=1998] E38 S28 W5 S10 W4 N10 W6 S10 W8 N10 W6 S10 W4 N10 W5 N28$ W15$.

## EXTRA FEATURES

| LN | OB/XF CODE | DESCRIPTION | BLD | CAP | L | W | UNITS | UT | Adj R | ADJ UNIT PRICE | ORIG COND | YEAR ON | YEAR ACTUAL | Q | % COND | OB/XF MKT VALUE | NOTES |
|---|---|---|---|---|---|---|---|---|---|---|---|---|---|---|---|---|---|
| 1 | 0500 | FP-PRE FAB | 0 | 100 | 0 | 0 | 1.00 | UT | 3,500.00 | 3,500.00 | 100 | 1998 | 1998 | 3 | 83 | 2,905 | |
| 2 | 0861 | POOL GUNIT | 0 | 100 | 0 | 0 | 415.00 | SF | 85.00 | 85.00 | 100 | 1998 | 1998 | 3 | 23 | 8,113 | |
| 3 | 0845 | KOOL DECK | 0 | 100 | 0 | 0 | 600.00 | SF | 7.25 | 7.25 | 100 | 1998 | 1998 | 3 | 77 | 3,350 | |
| 4 | 0681 | POLE SHED | 0 | 100 | 12 | 12 | 144.00 | SF | 15.00 | 15.00 | 100 | 2003 | 2003 | 3 | 36 | 778 | |
| 5 | 0681 | POLE SHED | 0 | 100 | 21 | 13 | 273.00 | SF | 15.00 | 15.00 | 100 | 1998 | 1998 | 3 | 27 | 1,106 | |

## LAND DESCRIPTION

TOTAL OB/XF 16,252

| LN | USE CODE | CLS | LAND USE DESCRIPTION | CAP | RD | LOC ZONE | FRONT | DEPTH | TOT LND UTS | UNIT TYPE | DT | DPTH FACT | % COND | TOT ADJ | UNIT PRICE | ADJ UNIT PRICE | LAND VALUE | OTHER ADJUSTMENTS AND NOTES | YEAR | DENSITY | DECL | FRZ | YR | CONSRV |
|---|---|---|---|---|---|---|---|---|---|---|---|---|---|---|---|---|---|---|---|---|---|---|---|---|
| 1 | 000115 | C | SFR ACRES | 100 | 0005 | OR | 0.00 | 0.00 | 5.71 | AC | | 1.00 | 1.00 | 1.00 | 19,000.00 | 19,000.00 | 108,490 | | | | | | | |

REVIEW DATE 09/23/2019 BY TWX Total Acres: 5.71 Total Land Value: 108,490 Market: 0 Agricultural: 0 Common: 108,490 PRINTED 08/02/2023 BY SYS

PT OF SE1/4
IN OR 2397/433
PARCELS 7-21 & 7-22

JOHNSON NICHOLAS B & MAYKAYLA
26169 WILLIE HODGES RD
HILLIARD, FL 32046

**2023**

**30-3N-24-0000-0007-0210**

## BUILDING CHARACTERISTICS

| ELEMENT | CD | CONSTRUCTION |
|---|---|---|
| Exterior Wall | 05 | AVERAGE 90 |
| Exterior Wall | 20 | FACE BRICK 10 |
| Roof Structur | 03 | GABLE/HIP 100 |
| Roof Cover | 03 | COMP SHNGL 100 |
| Interior Wall | 05 | DRYWALL 100 |
| Interior Floo | 03 | CONC FINSH 50 |
| Interior Floo | 14 | CARPET 50 |
| Air Condition | 03 | CENTRAL 100 |
| Heating Type | 04 | AIR DUCTED 100 |
| Bedrooms | | 0 100 |
| Bathrooms | | 0 100 |
| Frame | 02 | WOOD FRAME 100 |
| Stories | 0 | 0 100 |
| Units | | 0 100 |
| Occupancy | 00 | NONE 100 |
| Quality | 06 | Quality Level 06 |
| DOR CODE | 0100 | SINGLE FAMILY |
| MAP NUM | | MKT AREA 09 |
| NEIGHBORHOOD/LOC | 9001.00 | |

| AREA TYPE | TOTAL GROSS AREA | PCT OF BASE | TOT ADJ AREA | SUBAREA MARKET VALUE |
|---|---|---|---|---|
| BAS | 968 | 100 | 968 | 49,173 |
| FGR | 960 | 55 | 528 | 26,822 |
| FOP | 588 | 30 | 176 | 8,940 |
| STR | 108 | 10 | 11 | 559 |
| TOTALS | 2,624 | | 1,683 | 85,494 |

## MARKET ADJUSTMENTS

| TYPE | MDL | EFF. AREA | TOT ADJ PTS | EFF. BASE RATE | REPL. COST NEW | AYB | EYB | ECON | FNCT | | NORM | % COND |
|---|---|---|---|---|---|---|---|---|---|---|---|---|
| 0150 | 01 | 1,683 | 106.1450 | 53.07 | 89,317 | 2008 | 2013 | 0 | 0 | 0 | 4.28 | 95.72 |

2 ACCESORY U – 100% - 2021 Heated Area: 968 HX Base Yr 2021

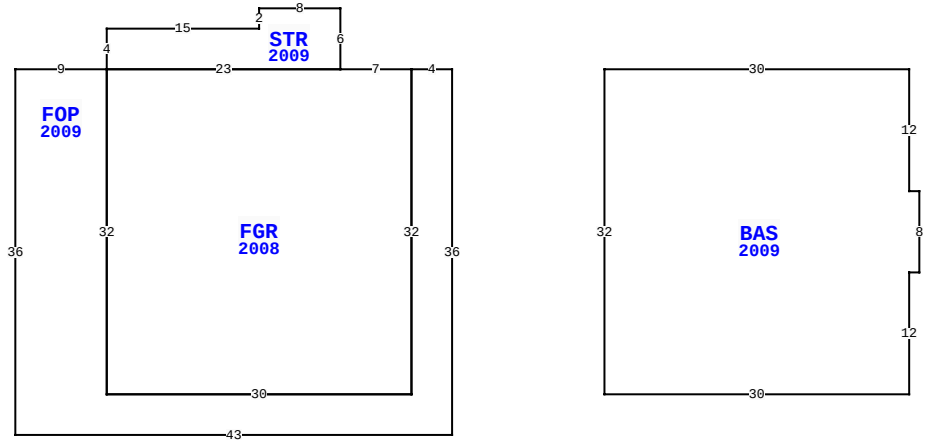


26169 WILLIE HODGES RD, HILLIARD

| | | | |
|---|---|---|---|
| BLD DATE | | LGL DATE | |
| XF DATE | | LAND DATE | 06/16/2023 MLU |
| INC DATE | | AG DATE | |

## NASSAU COUNTY PROPERTY

PAGE 2 of 2 4

### VALUATION SUMMARY

| | | |
|---|---|---|
| VALUATION BY | | STANDARD |
| Tax Group: 4 | Tax Dist: | |
| BUILDING MARKET VALUE | | 498,166 |
| TOTAL MARKET OB/XF VALUE | | 16,252 |
| TOTAL LAND VALUE - MARKET | | 108,490 |
| TOTAL MARKET VALUE | | 622,908 |
| SOH/AGL Deduction | | 143,987 |
| ASSESSED VALUE | | 478,921 |
| TOTAL EXEMPTION VALUE | HX HB | 50,000 |
| BASE TAXABLE VALUE | | 428,921 |
| TOTAL JUST VALUE | | 622,908 |
| NCON VALUE | | 0 |
| INCOME VALUE | | |
| PREVIOUS YEAR MKT VALUE | | 538,552 |

| PERMIT NUM | DESCRIPTION | AMT | ISSUED |
|---|---|---|---|
| R09239 | REPAIR/RRF | 3,000 | 05/01/2006 |

## SALES DATA

| OFF RECORD Number | DATE | TYPE INST | Q U | V I | RSN CD | SALE PRICE |
|---|---|---|---|---|---|---|
| 2397/0433 | 9/28/2020 | WD | Q | I | 01 | 520,000 |
| GRANTOR: DAVIS DONNIE C & LOUI | | | | | | |
| GRANTEE: JOHNSON NICHOLAS B | | | | | | |
| 0896/0219 | 8/20/1999 | QC | U | I | 07 | 100 |
| GRANTOR: DAVIS DONNIE ETAL | | | | | | |
| GRANTEE: DAVIS DONNIE & LOUI | | | | | | |

## BUILDING NOTES

## BUILDING DIMENSIONS

FOP=[YR=2009] W4 FGR=[YR=2008] W7 STR=[YR=2009] N6 W8 S2 W15 S4 E23$ W23 S32 E30 N32$ S32 W30 N32 W9 S36 E43 N36$ PTR=E15 BAS=[YR=2009] E30 S12 E1 S8 W1 S12 W30 N32$ W15$ .

## EXTRA FEATURES

| L N | OB/XF CODE | DESCRIPTION | BLD | CAP | L | W | UNITS | UT | Adj R | ADJ UNIT PRICE | ORIG COND | YEAR ON | YEAR ACTUAL | Q | % COND | OB/XF MKT VALUE | NOTES |
|---|---|---|---|---|---|---|---|---|---|---|---|---|---|---|---|---|---|

## LAND DESCRIPTION

TOTAL OB/XF 0

| L N | USE CODE | CLS | LAND USE DESCRIPTION | CAP | R D | LOC ZONE | FRONT | DEPTH | TOT LND UTS | UNIT TYPE | D T | DPTH FACT | % COND | TOT ADJ | UNIT PRICE | ADJ UNIT PRICE | LAND VALUE | OTHER ADJUSTMENTS AND NOTES | YEAR | DENSITY | DECL | FRZ | YR | CONSRV |
|---|---|---|---|---|---|---|---|---|---|---|---|---|---|---|---|---|---|---|---|---|---|---|---|---|

REVIEW DATE 09/23/2019 BY TWX Total Acres: 5.71 Total Land Value: 108,490 Market: 0 Agricultural: 0 Common: 108,490 PRINTED 08/02/2023 BY SYS