LOT 114
AMELIA CONCOURSE PH 3 UNIT B
OR 2365/1256

DAY STEVEN KILBOURNE & ANDREA IVESTER E
95162 CORNFLOWER DR
FERNANDINA BEACH, FL 32034

2023

30-2N-28-0152-0114-0000

BUILDING CHARACTERISTICS

ELEMENT	CD	CONSTRUCTION
Exterior Wall	31	HARDIE BRD 100
Roof Structur	03	GABLE/HIP 100
Roof Cover	03	COMP SHNGL 100
Interior Wall	05	DRYWALL 100
Interior Floo	11	CLAY TILE 70
Interior Floo	14	CARPET 30
Air Condition	03	CENTRAL 100
Heating Type	04	AIR DUCTED 100
Bedrooms		5 100
Bathrooms		3 100
Frame	02	WOOD FRAME 100
Stories	2.	2. 100
Units		0 100
Occupancy	00	NONE 100
Quality	04	Quality Level 04
DOR CODE	0100	SINGLE FAMILY
MAP NUM		MKT AREA 04
NEIGHBORHOOD/LOC	4067.200	

AREA TYPE	TOTAL GROSS AREA	PCT OF BASE	TOT ADJ AREA	SUBAREA MARKET VALUE
BAS	2,561	100	2,561	253,590
FGR	595	55	327	32,380
FOP	208	30	62	6,139
FOP	208	30	62	6,139
FUS	795	100	795	78,721
PTO	160	5	8	792
STR	48	10	5	495
TOTALS	4,575		3,820	378,256

MARKET ADJUSTMENTS

TYPE	MDL	EFF. AREA	TOT ADJ PTS	EFF. BASE RATE	REPL. COST NEW	AYB	EYB	ECON	FNCT		NORM	% COND
0100	01	3,820	109.7145	99.02	378,256	2021	2021	0	0	0	0.00	100.00

1 SINGLE FAM – 100% - 2022 Heated Area: 3356 HX Base Yr 2022

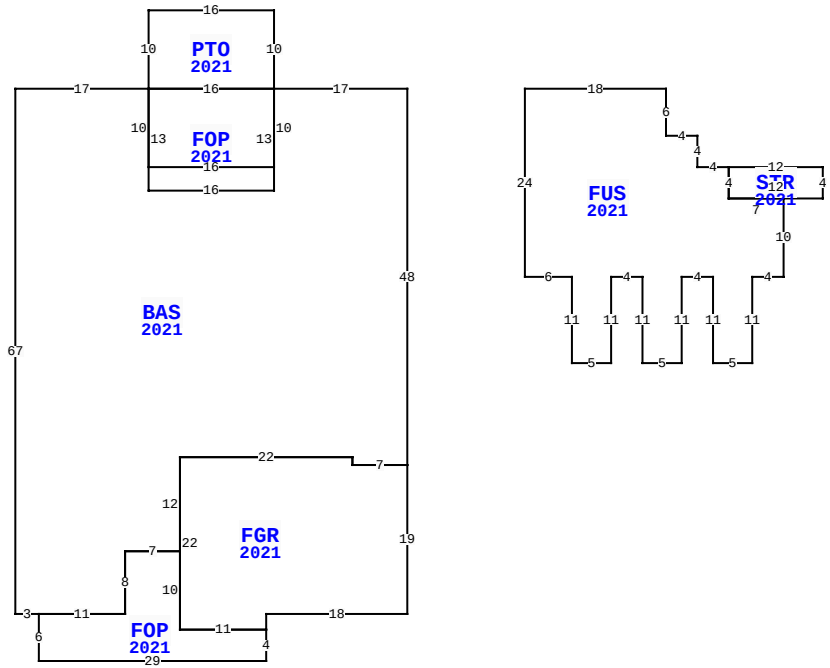

95162 CORNFLOWER DR, FERNANDINA BEACH

BLD DATE	03/03/2023 NW	LGL DATE	
XF DATE		LAND DATE	
INC DATE		AG DATE	

NASSAU COUNTY PROPERTY

PAGE 1 of 1 4

VALUATION SUMMARY

VALUATION BY		STANDARD
Tax Group: 4	Tax Dist:	
BUILDING MARKET VALUE		378,256
TOTAL MARKET OB/XF VALUE		4,076
TOTAL LAND VALUE - MARKET		75,000
TOTAL MARKET VALUE		457,332
SOH/AGL Deduction		36,468
ASSESSED VALUE		420,864
TOTAL EXEMPTION VALUE	HX HB SX	100,000
BASE TAXABLE VALUE		320,864
TOTAL JUST VALUE		457,332
NCON VALUE		0
INCOME VALUE		
PREVIOUS YEAR MKT VALUE		408,606

PERMIT NUM	DESCRIPTION	AMT	ISSUED
C2010228	CO ISSUED	0	03/30/2021
B2010228	NEW CONSTR	443,562	10/26/2020

SALES DATA

OFF RECORD Number	DATE	TYPE INST	Q / U	V / I	RSN CD	SALE PRICE
2449/1121	3/30/2021	WD	Q	I	01	376,300
GRANTOR: DREAM FINDERS HOMES L						
GRANTEE: DAY STEVEN KILBOURN						
2395/1495	9/25/2020	WD	U	V	30	840,000
GRANTOR: DFC AMELIA CONCOURSE						
GRANTEE: DREAM FINDERS HOMES						

BUILDING NOTES

BUILDING DIMENSIONS

BAS=[YR=2021] W17 PTO=[YR=2021] N10 W16 S10 FOP=[YR=2021] S13 E16 N13 W16$ E16$ S10 W16 N10 W17 S67 E3 FOP=[YR=2021] S6 E29N4 FGR=[YR=2021] N2 E18 N19 W7 N1 W22 S22 E11$ W11 N10 W7 S8 W11$ E11 N8 E7 N12 E22 S1 E7 N48$PTR=E15 FUS=[YR=2021] E18 S6 E4 S4 E4 STR=[YR=2021] E12 S4 W12 N4$ S4 E7 S10 W4 S11 W5 N11 W4 S11 W5N11 W4 S11 W5 N11 W6 N24$ W15$.

EXTRA FEATURES

LN	OB/XF CODE	DESCRIPTION	BLD	CAP	L	W	UNITS	UT	Adj R	ADJ UNIT PRICE	ORIG COND	YEAR ON	YEAR ACTUAL	Q	% COND	OB/XF MKT VALUE	NOTES
1	0812	CONCRETE C	0	100	0	0	1,019.00	SF	4.00	4.00	100	2021	2021	3	100	4,076	

LAND DESCRIPTION

TOTAL OB/XF 4,076

LN	USE CODE	CLS	LAND USE DESCRIPTION	CAP	RD	LOC ZONE	FRONT	DEPTH	TOT LND UTS	UNIT TYPE	DT	DPTH FACT	% COND	TOT ADJ	UNIT PRICE	ADJ UNIT PRICE	LAND VALUE	OTHER ADJUSTMENTS AND NOTES	YEAR	DENSITY	DECL	FRZ	YR	CONSRV
1	000100	C	SFR	100			0.00	0.00	1.00	LT		1.00	1.00	1.00	75,000.00	75,000.00	75,000							

REVIEW DATE 09/10/2021 BY JH Total Acres: 0.00 Total Land Value: 75,000 Market: 0 Agricultural: 0 Common: 75,000 PRINTED 08/02/2023 BY SYS