LOT 67
AMELIA CONCOURSE PH 3 UNIT C
OR 2369/448

RANKIN CLINT ALTON &/GIBSON WELLINGTON D P
95392 ORCHID BLOSSOM TRAIL
FERNANDINA BEACH, FL 32034

2023

30-2N-28-0152-0067-0000

NASSAU COUNTY PROPERTY

BUILDING CHARACTERISTICS

ELEMENT	CD	CONSTRUCTION
Exterior Wall	31	HARDIE BRD 100
Roof Structur	03	GABLE/HIP 100
Roof Cover	03	COMP SHNGL 100
Interior Wall	05	DRYWALL 100
Interior Floo	11	CLAY TILE 50
Interior Floo	14	CARPET 50
Air Condition	03	CENTRAL 100
Heating Type	04	AIR DUCTED 100
Bedrooms		5 100
Bathrooms		4 100
Frame	02	WOOD FRAME 100
Stories	2.	2. 100
Units		0 100
Occupancy	00	NONE 100
Quality	04	Quality Level 04

DOR CODE	0100	SINGLE FAMILY	
MAP NUM		MKT AREA	04
NEIGHBORHOOD/LOC	4067.200		

AREA TYPE	TOTAL GROSS AREA	PCT OF BASE	TOT ADJ AREA	SUBAREA MARKET VALUE
BAS	1,420	100	1,420	144,229
FGR	640	55	352	35,753
FOP	120	30	36	3,657
FOP	134	30	40	4,063
FUS	1,441	100	1,441	146,362
STR	80	10	8	813
TOTALS	3,835		3,297	334,876

MARKET ADJUSTMENTS

TYPE	MDL	EFF. AREA	TOT ADJ PTS	EFF. BASE RATE	REPL. COST NEW	AYB	EYB	ECON	FNCT		NORM	% COND
0100	01	3,297	112.5390	101.57	334,876	2022	2022	0	0	0	0.00	100.00

1 SINGLE FAM – 0% - 2023 Heated Area: 2861 HX Base Yr

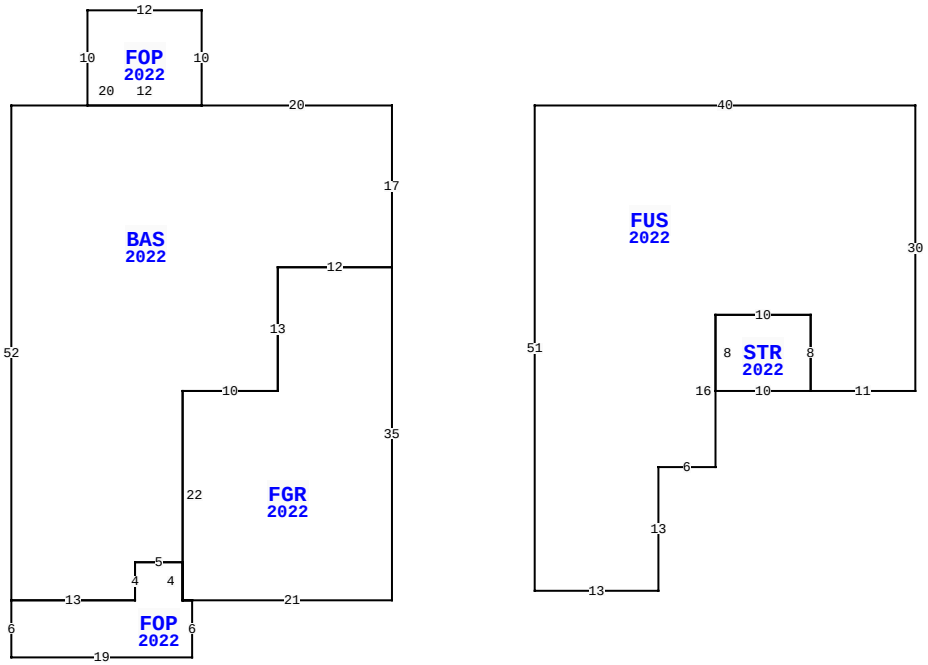

BLD DATE	03/03/2023	NW	LGL DATE
XF DATE			LAND DATE
INC DATE			AG DATE

95392 ORCHID BLOSSOM TR, FERNANDINA BEACH

VALUATION SUMMARY

VALUATION BY	STANDARD
Tax Group: 4	Tax Dist:
BUILDING MARKET VALUE	334,876
TOTAL MARKET OB/XF VALUE	3,936
TOTAL LAND VALUE - MARKET	75,000
TOTAL MARKET VALUE	413,812
SOH/AGL Deduction	0
ASSESSED VALUE	413,812
TOTAL EXEMPTION VALUE	0
BASE TAXABLE VALUE	413,812
TOTAL JUST VALUE	413,812
NCON VALUE	338,812
INCOME VALUE	
PREVIOUS YEAR MKT VALUE	65,000

PERMIT NUM	DESCRIPTION	AMT	ISSUED
B2109860	NEW CONSTR	411,362	07/27/2021

SALES DATA

OFF RECORD Number	DATE	TYPE INST	Q U	V I	RSN CD	SALE PRICE
2544/0484	2/28/2022	WD	Q	I	01	504,100
GRANTOR: DREAM FINDERS HOMES L						
GRANTEE: RANKIN CLINT A & WE						
2473/1333	6/24/2021	WD	U	V	30	496,000
GRANTOR: DFC AMELIA CONCOURSE						
GRANTEE: DREAM FINDERS HOMES						

BUILDING NOTES

EXTRA FEATURES

LN	OB/XF CODE	DESCRIPTION	BLD	CAP	L	W	UNITS	UT	Adj R	ADJ UNIT PRICE	ORIG COND	YEAR ON	YEAR ACTUAL	Q	% COND	OB/XF MKT VALUE	NOTES
1	0811	CONCRETE B	0	0	0	0	757.00	SF	5.20	5.20	100	2022	2022	3	100	3,936	

BUILDING DIMENSIONS

BAS=[YR=2022] W20 FOP=[YR=2022] N10 W12 S10 E12$ W20 S52
FOP=[YR=2022] S6 E19 N6 W1 N4 W5 S4 W13$ E13 N4 E5 S4 E1
FGR=[YR=2022] E21 N35 W12 S13 W10 S22 E1$ W1 N22 E10 N13 E12
N17$ PTR=E15 FUS=[YR=2022] E40 S30 W11 STR=[YR=2022] W10 N8
E10 S8$ N8 W10 S16 W6 S13 W13 N51$ W15 $.

LAND DESCRIPTION

TOTAL OB/XF 3,936

LN	USE CODE	CLS	LAND USE DESCRIPTION	CAP	RD	LOC ZONE	FRONT	DEPTH	TOT LND UTS	UNIT TYPE	DT	DPTH FACT	% COND	TOT ADJ	UNIT PRICE	ADJ UNIT PRICE	LAND VALUE	OTHER ADJUSTMENTS AND NOTES	YEAR	DENSITY	DECL	FRZ	YR	CONSRV
1	000134	C	SFR POND	0			0.00	0.00	1.00	LT		1.00	1.00	1.00	75,000.00	75,000.00	75,000							

REVIEW DATE 03/09/2022 BY DJ Total Acres: 0.00 Total Land Value: 75,000 Market: 0 Agricultural: 0 Common: 75,000 PRINTED 08/02/2023 BY SYS