LOT 36
AMELIA CONCOURSE PH 3 UNIT B
OR 2365/1256

FKH SFR PROPCO K LP
1850 PAWKWAY PLACE SUITE 900
MARIETTA, GA 30067

2023

30-2N-28-0152-0036-0000

BUILDING CHARACTERISTICS

ELEMENT	CD	CONSTRUCTION
Exterior Wall	31	HARDIE BRD 100
Roof Structur	03	GABLE/HIP 100
Roof Cover	03	COMP SHNGL 100
Interior Wall	05	DRYWALL 100
Interior Floo	13	LVT/LAMNT 70
Interior Floo	14	CARPET 30
Air Condition	03	CENTRAL 100
Heating Type	04	AIR DUCTED 100
Bedrooms		6 100
Bathrooms		3 100
Frame	02	WOOD FRAME 100
Stories	2.	2. 100
Units		0 100
Occupancy	00	NONE 100
Quality	04	Quality Level 04
DOR CODE	0100	SINGLE FAMILY
MAP NUM		MKT AREA 04
NEIGHBORHOOD/LOC	4067.200	

AREA TYPE	TOTAL GROSS AREA	PCT OF BASE	TOT ADJ AREA	SUBAREA MARKET VALUE
BAS	2,211	100	2,211	219,398
FGR	380	55	209	20,739
FOP	122	30	37	3,672
FOP	128	30	38	3,771
FUS	470	100	470	46,638
PTO	128	5	6	595
STR	24	10	2	198
TOTALS	3,463		2,973	295,011

MARKET ADJUSTMENTS

TYPE	MDL	EFF. AREA	TOT ADJ PTS	EFF. BASE RATE	REPL. COST NEW	AYB	EYB	ECON	FNCT		NORM	% COND
0100	01	2,973	109.9518	99.23	295,011	2021	2021	0	0	0	0.00	100.00

1 SINGLE FAM – 0% - 2023 Heated Area: 2681 HX Base Yr

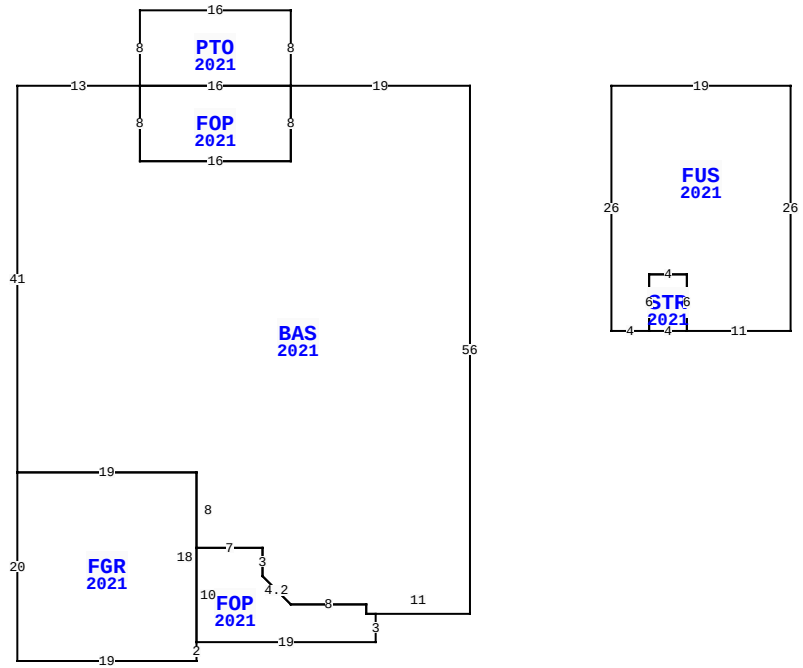

BLD DATE	03/03/2023	NW	LGL DATE
XF DATE			LAND DATE
INC DATE			AG DATE

95217 ORCHID BLOSSOM TR, FERNANDINA BEACH

NASSAU COUNTY PROPERTY

PAGE 1 of 1 4

VALUATION SUMMARY

VALUATION BY	STANDARD
Tax Group: 4	Tax Dist:
BUILDING MARKET VALUE	295,011
TOTAL MARKET OB/XF VALUE	3,234
TOTAL LAND VALUE - MARKET	75,000
TOTAL MARKET VALUE	373,245
SOH/AGL Deduction	0
ASSESSED VALUE	373,245
TOTAL EXEMPTION VALUE	0
BASE TAXABLE VALUE	373,245
TOTAL JUST VALUE	373,245
NCON VALUE	0
INCOME VALUE	
PREVIOUS YEAR MKT VALUE	332,734

PERMIT NUM	DESCRIPTION	AMT	ISSUED
C2009875	CO ISSUED	0	03/25/2021
B2009875	NEW CONSTR	353,068	10/19/2020

SALES DATA

OFF RECORD Number	DATE	TYPE INST	Q / U	V / I	RSN CD	SALE PRICE
2571/1388	6/14/2022	WD	U	I	37	511,000
GRANTOR: GRANGER FALLON CHANEL						
GRANTEE: FKH SFR PROPCO K LP						
2447/0350	3/25/2021	WD	Q	I	01	317,800
GRANTOR: DREAM FINDERS HOMES L						
GRANTEE: GRANGER FALLON CHAN						

BUILDING NOTES

BUILDING DIMENSIONS

BAS=[YR=2021] W19 PTO=[YR=2021] N8 W16 S8 FOP=[YR=2021] S8 E16 N8 W16$ E16$ S8 W16 N8 W13 S41 FGR=[YR=2021] S20 E19 N2 FOP=[YR=2021] E19 N3 W1 N1 W8 U3 L3 N3 W7 S10$ N18 W19$ E19 S8 E7 S3 D3 R3 E8 S1 E11 N56$ PTR= E15 FUS=[YR=2021] E19 S26 W11 STR=[YR=2021] N6 W4 S6 E4$ N6 W4 S6 W4 N26$ W15$.

EXTRA FEATURES

LN	OB/XF CODE	DESCRIPTION	BLD	CAP	L	W	UNITS	UT	Adj R	ADJ UNIT PRICE	ORIG COND	YEAR ON	YEAR ACTUAL	Q	% COND	OB/XF MKT VALUE	NOTES
1	0811	CONCRETE B	0	0	0	0	622.00	SF	5.20	5.20	100	2021	2021	3	100	3,234	

LAND DESCRIPTION

TOTAL OB/XF 3,234

LN	USE CODE	CLS	LAND USE DESCRIPTION	CAP	RD	LOC ZONE	FRONT	DEPTH	TOT LND UTS	UNIT TYPE	DT	DPTH FACT	% COND	TOT ADJ	UNIT PRICE	ADJ UNIT PRICE	LAND VALUE	OTHER ADJUSTMENTS AND NOTES	YEAR	DENSITY	DECL	FRZ	YR	CONSRV
1	000100	C	SFR	0			0.00	0.00	1.00	LT		1.00	1.00	1.00	75,000.00	75,000.00	75,000							

REVIEW DATE 09/08/2021 BY JH Total Acres: 0.00 Total Land Value: 75,000 Market: 0 Agricultural: 0 Common: 75,000 PRINTED 08/02/2023 BY SYS