LOT 126
IN OR 2194/1744
AMELIA CONCOURSE SUB PHASE 2

COFOJOHN SHIRLEY A
95294 SNAPDRAGON DRIVE
FERNANDINA BEACH, FL 32034

2023

30-2N-28-0151-0126-0000

BUILDING CHARACTERISTICS

ELEMENT	CD	CONSTRUCTION
Exterior Wall	31	HARDIE BRD 100
Roof Structur	08	IRREGULAR 100
Roof Cover	03	COMP SHNGL 100
Interior Wall	05	DRYWALL 100
Interior Floo	11	CLAY TILE 60
Interior Floo	14	CARPET 40
Air Condition	03	CENTRAL 100
Heating Type	04	AIR DUCTED 100
Bedrooms		4 100
Bathrooms		3 100
Frame	02	WOOD FRAME 100
Stories	0	0 100
Units		0 100
Occupancy	00	NONE 100
Quality	04	Quality Level 04
DOR CODE	0100	SINGLE FAMILY
MAP NUM		MKT AREA 04
NEIGHBORHOOD/LOC	4067.100	

AREA TYPE	TOTAL GROSS AREA	PCT OF BASE	TOT ADJ AREA	SUBAREA MARKET VALUE
BAS	2,473	100	2,473	250,167
FGR	567	55	312	31,561
FOP	240	30	72	7,283
FOP	240	30	72	7,283
FUS	372	100	372	37,631
STR	60	10	6	607
TOTALS	3,952		3,307	334,535

MARKET ADJUSTMENTS

TYPE	MDL	EFF. AREA	TOT ADJ PTS	EFF. BASE RATE	REPL. COST NEW	AYB	EYB	ECON	FNCT		NORM	% COND
0100	01	3,307	113.7948	102.70	339,629	2018	2018	0	0	0	1.50	98.50

1 SINGLE FAM – 100% - 2019 Heated Area: 2845 HX Base Yr 2019

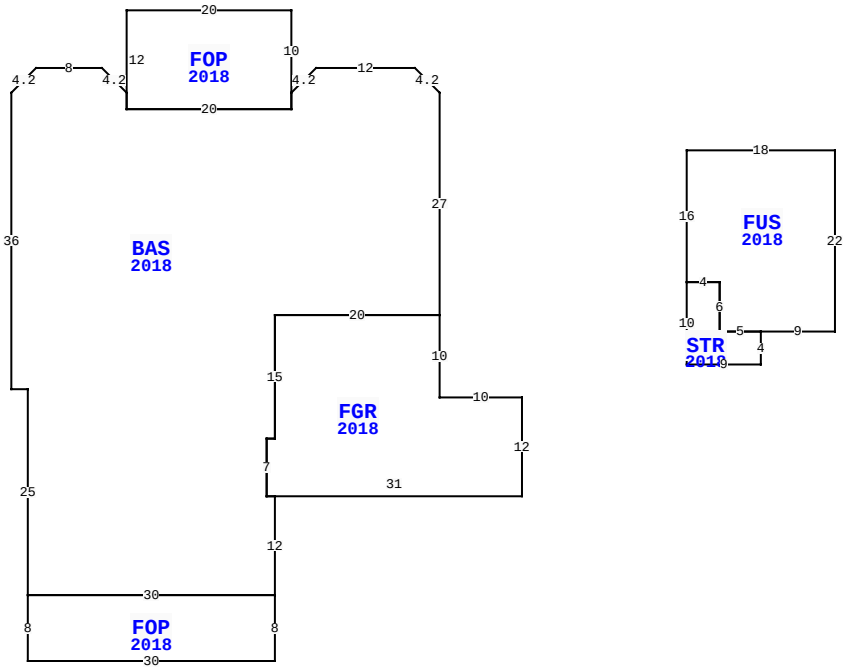

95294 SNAPDRAGON DR, FERNANDINA BEACH

BLD DATE	03/29/2023 NW	LGL DATE	
XF DATE		LAND DATE	
INC DATE		AG DATE	

NASSAU COUNTY PROPERTY

PAGE 1 of 1 4

VALUATION SUMMARY

VALUATION BY		STANDARD
Tax Group: 4	Tax Dist:	
BUILDING MARKET VALUE		334,535
TOTAL MARKET OB/XF VALUE		6,092
TOTAL LAND VALUE - MARKET		75,000
TOTAL MARKET VALUE		415,627
SOH/AGL Deduction		208,459
ASSESSED VALUE		207,168
TOTAL EXEMPTION VALUE	HX HB WX	55,000
BASE TAXABLE VALUE		152,168
TOTAL JUST VALUE		415,627
NCON VALUE		0
INCOME VALUE		
PREVIOUS YEAR MKT VALUE		386,406

PERMIT NUM	DESCRIPTION	AMT	ISSUED
18004529	CO ISSUED	0	05/04/2018
B1710183	NEW CONSTR	368,179	11/16/2017

SALES DATA

OFF RECORD Number	DATE	TYPE INST	Q / U	V / I	RSN CD	SALE PRICE
2194/1744	5/03/2018	WD	Q	I	01	324,300
GRANTOR: DREAM FINDERS HOMES L						
GRANTEE: COFOJOHN SHIRLEY A						
2156/0879	11/02/2017	WD	U	V	30	546,000
GRANTOR: DFH AMELIA LLC						
GRANTEE: DREAM FINDERS HOMES						

BUILDING NOTES

BUILDING DIMENSIONS

FGR=[YR=2018] W10 N10 BAS=[YR=2018] N27 U3 L3 W12 D3 L3 FOP=[YR=2018] N10 W20 S12 E20 N2$ S2 W20 N2 U3 L3 W8 D3 L3 S36 E2 S25 FOP=[YR=2018] S8 E30 N8 W30$ E30 N12 W1 N7 E1 N15 E20$ W20 S15 W1 S7 E31 N12$ PTR=N30 E20 FUS=[YR=2018] E18 S22 W9 STR=[YR=2018] S4 W9 N10 E4 S6 E5$ W5 N6 W4 N16$ W20 S30$.

EXTRA FEATURES

LN	OB/XF CODE	DESCRIPTION	BLD	CAP	L	W	UNITS	UT	Adj R	ADJ UNIT PRICE	ORIG COND	YEAR ON	YEAR ACTUAL	Q	% COND	OB/XF MKT VALUE	NOTES
1	0812	CONCRETE C	0	100	0	0	1,049.00	SF	4.00	4.00	100	2018	2018	3	98	4,112	
2	0504	FP-ELECTRI	0	100	0	0	1.00	UT	2,000.00	2,000.00	100	2018	2018	3	99	1,980	

LAND DESCRIPTION

TOTAL OB/XF 6,092

LN	USE CODE	CLS	LAND USE DESCRIPTION	CAP	RD	LOC ZONE	FRONT	DEPTH	TOT LND UTS	UNIT TYPE	DT	DPTH FACT	% COND	TOT ADJ	UNIT PRICE	ADJ UNIT PRICE	LAND VALUE	OTHER ADJUSTMENTS AND NOTES	YEAR	DENSITY	DECL	FRZ	YR	CONSRV
1	000134	C	SFR POND	100			0.00	0.00	1.00	LT		1.00	1.00	1.00	75,000.00	75,000.00	75,000							

REVIEW DATE 01/18/2019 BY TW Total Acres: 0.00 Total Land Value: 75,000 Market: 0 Agricultural: 0 Common: 75,000 PRINTED 08/02/2023 BY SYS