LOT 120
AMELIA CONCOURSE SUB PHASE 2
PBK 8/222

EDWARDS TONYA D
95320 SNAPDRAGON DRIVE
FERNANDINA BEACH, FL 32034

2023

30-2N-28-0151-0120-0000

BUILDING CHARACTERISTICS

ELEMENT	CD	CONSTRUCTION
Exterior Wall	31	HARDIE BRD 100
Roof Structur	08	IRREGULAR 100
Roof Cover	03	COMP SHNGL 100
Interior Wall	05	DRYWALL 100
Interior Floo	11	CLAY TILE 50
Interior Floo	14	CARPET 50
Air Condition	03	CENTRAL 100
Heating Type	04	AIR DUCTED 100
Bedrooms		4 100
Bathrooms		3 100
Frame	02	WOOD FRAME 100
Stories	1.5	1.5 100
Units		0 100
Occupancy	00	NONE 100
Quality	04	Quality Level 04
DOR CODE	0100	SINGLE FAMILY
MAP NUM		MKT AREA 04
NEIGHBORHOOD/LOC	4067.100	

AREA TYPE	TOTAL GROSS AREA	PCT OF BASE	TOT ADJ AREA	SUBAREA MARKET VALUE
BAS	1,909	100	1,909	204,761
FGR	420	55	231	24,777
FOP	48	30	14	1,501
FOP	224	30	67	7,187
FUS	376	100	376	40,330
STR	36	10	4	429
TOTALS	3,013		2,601	278,986

MARKET ADJUSTMENTS

TYPE	MDL	EFF. AREA	TOT ADJ PTS	EFF. BASE RATE	REPL. COST NEW	AYB	EYB	ECON	FNCT		NORM	% COND
0100	01	2,601	119.4480	107.80	280,388	2020	2020	0	0	0	0.50	99.50

1 SINGLE FAM – 100% - 2023 Heated Area: 2285 HX Base Yr 2023

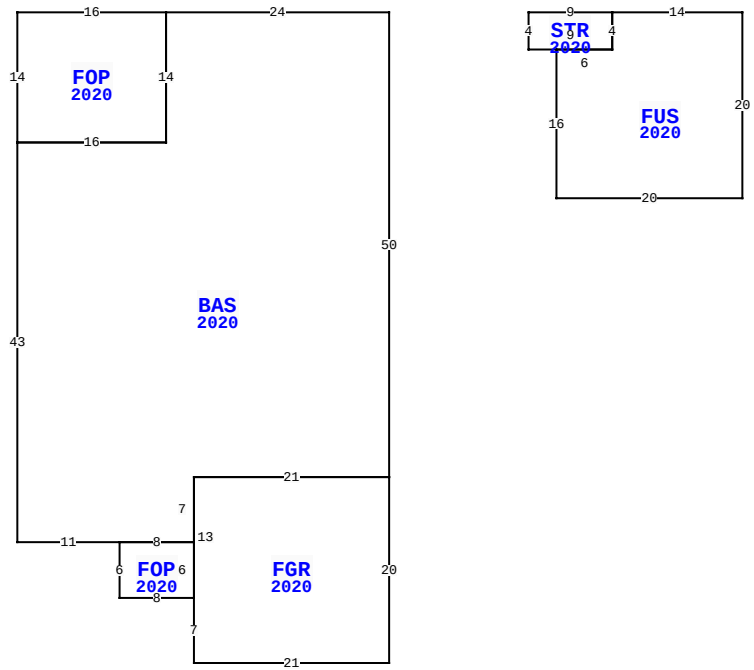

95320 SNAPDRAGON DR, FERNANDINA BEACH

BLD DATE	03/29/2023 NW	LGL DATE	
XF DATE		LAND DATE	
INC DATE		AG DATE	

NASSAU COUNTY PROPERTY

PAGE 1 of 1 4

VALUATION SUMMARY

VALUATION BY		STANDARD
Tax Group: 4	Tax Dist:	
BUILDING MARKET VALUE		278,986
TOTAL MARKET OB/XF VALUE		3,565
TOTAL LAND VALUE - MARKET		75,000
TOTAL MARKET VALUE		357,551
SOH/AGL Deduction		0
ASSESSED VALUE		357,551
TOTAL EXEMPTION VALUE	HX HB	50,000
BASE TAXABLE VALUE		307,551
TOTAL JUST VALUE		357,551
NCON VALUE		0
INCOME VALUE		
PREVIOUS YEAR MKT VALUE		332,539

PERMIT NUM	DESCRIPTION	AMT	ISSUED
C1913029	CO ISSUED	0	04/21/2020
19013029	NEW CONSTR	307,767	12/30/2019

SALES DATA

OFF RECORD Number	DATE	TYPE INST	Q U	V I	RSN CD	SALE PRICE
2369/1757	6/19/2020	WD	Q	I	01	293,000
GRANTOR: DREAM FINDERS HOMES L						
GRANTEE: EDWARDS TONYA D						
2336/1017	1/31/2020	WD	U	V	30	37,100
GRANTOR: DFH AMELIA LLC						
GRANTEE: DREAM FINDERS HOMES						

BUILDING NOTES

BUILDING DIMENSIONS

BAS=[YR=2020] W24 FOP=[YR=2020] W16 S14 E16 N14$ S14 W16 S43 E11 FOP=[YR=2020] S6 E8 FGR=[YR=2020] S7 E21 N20 W21 S13$ N6 W8$ E8 N7 E21 N50$ PTR= E15 STR=[YR=2020] E9 FUS=[YR=2020] E14 S20 W20 N16 E6 N4 $ S4 W9 N4$ W15$.

EXTRA FEATURES

LN	OB/XF CODE	DESCRIPTION	BLD	CAP	L	W	UNITS	UT	Adj R	ADJ UNIT PRICE	ORIG COND	YEAR ON	YEAR ACTUAL	Q	% COND	OB/XF MKT VALUE	NOTES
1	0810	CONCRETE A	0	100	14	3	42.00	SF	6.50	6.50	100	2020	2020	3	99	270	
2	0811	CONCRETE B	0	100	0	0	640.00	SF	5.20	5.20	100	2020	2020	3	99	3,295	

LAND DESCRIPTION

TOTAL OB/XF 3,565

LN	USE CODE	CLS	LAND USE DESCRIPTION	CAP	RD	LOC ZONE	FRONT	DEPTH	TOT LND UTS	UNIT TYPE	DT	DPTH FACT	% COND	TOT ADJ	UNIT PRICE	ADJ UNIT PRICE	LAND VALUE	OTHER ADJUSTMENTS AND NOTES	YEAR	DENSITY	DECL	FRZ	YR	CONSRV
1	000134	C	SFR POND	100			0.00	0.00	1.00	LT		1.00	1.00	1.00	75,000.00	75,000.00	75,000							

REVIEW DATE 01/26/2021 BY KW Total Acres: 0.00 Total Land Value: 75,000 Market: 0 Agricultural: 0 Common: 75,000 PRINTED 08/02/2023 BY SYS