LOT 91
AMELIA CONCOURSE SUB PHASE 2
PBK 8/222

GUTIERREZ JAKE RYAN & CAYLA JOY
95039 ORCHID PLACE
FERNANDINA BEACH, FL 32034

2023

30-2N-28-0151-0091-0000

NASSAU COUNTY PROPERTY

BUILDING CHARACTERISTICS

ELEMENT	CD	CONSTRUCTION
Exterior Wall	16	WD FR STUC 100
Roof Structur	03	GABLE/HIP 100
Roof Cover	03	COMP SHNGL 100
Interior Wall	05	DRYWALL 100
Interior Floo	11	CLAY TILE 50
Interior Floo	14	CARPET 50
Air Condition	03	CENTRAL 100
Heating Type	04	AIR DUCTED 100
Bedrooms		4 100
Bathrooms		3 100
Frame	02	WOOD FRAME 100
Stories	1.5	1.5 100
Units		0 100
Occupancy	00	NONE 100
Quality	04	Quality Level 04
DOR CODE	0100	SINGLE FAMILY
MAP NUM		MKT AREA 04
NEIGHBORHOOD/LOC	4067.100	

AREA TYPE	TOTAL GROSS AREA	PCT OF BASE	TOT ADJ AREA	SUBAREA MARKET VALUE
BAS	1,966	100	1,966	198,217
FGR	692	55	381	38,413
FOP	54	30	16	1,613
FOP	126	30	38	3,831
FUS	467	100	467	47,084
PTO	128	5	6	605
PTO	288	5	14	1,411
STR	37	10	4	404
TOTALS	3,758		2,892	291,578

MARKET ADJUSTMENTS

TYPE	MDL	EFF. AREA	TOT ADJ PTS	EFF. BASE RATE	REPL. COST NEW	AYB	EYB	ECON	FNCT		NORM	% COND
0100	01	2,892	113.9985	102.88	297,529	2018	2018	0	0	0	2.00	98.00

1 SINGLE FAM – 100% - 2023 Heated Area: 2433 HX Base Yr 2023

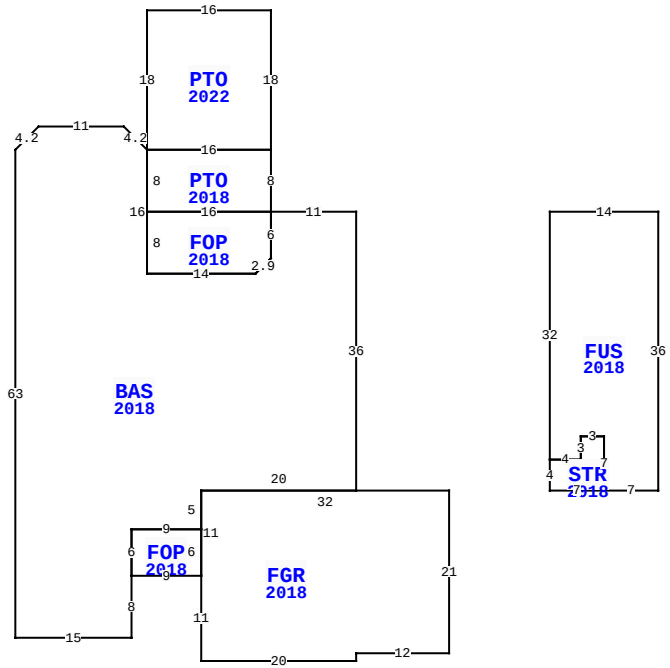

95039 ORCHID PL, FERNANDINA BEACH

BLD DATE	03/29/2023	NW	LGL DATE
XF DATE			LAND DATE
INC DATE			AG DATE

VALUATION SUMMARY

VALUATION BY		STANDARD
Tax Group: 4	Tax Dist:	
BUILDING MARKET VALUE		291,578
TOTAL MARKET OB/XF VALUE		10,626
TOTAL LAND VALUE - MARKET		75,000
TOTAL MARKET VALUE		377,204
SOH/AGL Deduction		112,786
ASSESSED VALUE		264,418
TOTAL EXEMPTION VALUE	HX HB	50,000
BASE TAXABLE VALUE		214,418
TOTAL JUST VALUE		377,204
NCON VALUE		4,337
INCOME VALUE		
PREVIOUS YEAR MKT VALUE		343,813

PERMIT NUM	DESCRIPTION	AMT	ISSUED
C1707706	CO ISSUED	0	02/23/2018
B1707706	NEW CONSTR	311,858	08/25/2017

SALES DATA

OFF RECORD Number	DATE	TYPE INST	Q / U	V / I	RSN CD	SALE PRICE
2597/0143	10/17/2022	WD	Q	I	02	535,000
GRANTOR: CUPIT STEPHEN A & JES						
GRANTEE: GUTIERREZ JAKE RYAN						
2179/1370	2/22/2018	WD	Q	I	02	273,100
GRANTOR: DREAM FINDERS HOMES L						
GRANTEE: CUPIT STEPHEN A & J						

BUILDING NOTES

BUILDING DIMENSIONS

BAS=[YR=2018] W11 PTO=[YR=2018] N8 PTO=[YR=2022] N18 W16 S18 E16$ W16 S8 E16$ FOP=[YR=2018] W16 S8 E14 U2 R2 N6$ S6 D2 L2 W14 N16 U3 L3 W11 D3 L3 S63 E15 N8 FOP=[YR=2018] E9 FGR=[YR=2018] S11 E20 N1 E12 N21 W32 S11$ N6 W9 S6$ N6 E9 N5 E20 N36$ PTR= E25 FUS=[YR=2018] E14 S36 W7 STR=[YR=2018] W7 N4 E4 N3 E3 S7$ N7 W3 S3 W4 N32$ W25$.

EXTRA FEATURES

LN	OB/XF CODE	DESCRIPTION	BLD	CAP	L	W	UNITS	UT	Adj R	ADJ UNIT PRICE	ORIG COND	YEAR ON	YEAR ACTUAL	Q	% COND	OB/XF MKT VALUE	NOTES
1	0810	CONCRETE A	0	100	19	3	57.00	SF	6.50	6.50	100	2018	2018	3	98	363	
2	0810	CONCRETE A	0	100	0	0	901.00	SF	6.50	6.50	100	2018	2018	3	98	5,739	
3	0476	VF 6 SBPL	0	100	0	0	132.00	LF	32.00	32.00	100	2022	2022	3	100	4,224	
4	0470	VNYL GATE	0	100	0	0	1.00	UT	300.00	300.00	100	2022	2022	3	100	300	

LAND DESCRIPTION

TOTAL OB/XF 10,626

LN	USE CODE	CLS	LAND USE DESCRIPTION	CAP	RD	LOC ZONE	FRONT	DEPTH	TOT LND UTS	UNIT TYPE	DT	DPTH FACT	% COND	TOT ADJ	UNIT PRICE	ADJ UNIT PRICE	LAND VALUE	OTHER ADJUSTMENTS AND NOTES	YEAR	DENSITY	DECL	FRZ	YR	CONSRV
1	000100	C	SFR	100			0.00	0.00	1.00	LT		1.00	1.00	1.00	75,000.00	75,000.00	75,000							

REVIEW DATE 01/06/2023 BY NWA Total Acres: 0.00 Total Land Value: 75,000 Market: 0 Agricultural: 0 Common: 75,000 PRINTED 08/02/2023 BY SYS