LOT 62
AMELIA CONCOURSE SUB PHASE 2
PBK 8/222

KELLY EDWARD J JR & KARIL
95338 SNAPDRAGON DRIVE
FERNANDINA BEACH, FL 32034

2023

30-2N-28-0151-0062-0000

BUILDING CHARACTERISTICS

ELEMENT	CD	CONSTRUCTION
Exterior Wall	16	WD FR STUC 100
Roof Structur	08	IRREGULAR 100
Roof Cover	03	COMP SHNGL 100
Interior Wall	05	DRYWALL 100
Interior Floo	11	CLAY TILE 60
Interior Floo	14	CARPET 40
Air Condition	03	CENTRAL 100
Heating Type	04	AIR DUCTED 100
Bedrooms		4 100
Bathrooms		3 100
Frame	02	WOOD FRAME 100
Stories	2.	2. 100
Units		0 100
Occupancy	00	NONE 100
Quality	04	Quality Level 04
DOR CODE	0100	SINGLE FAMILY
MAP NUM		MKT AREA 04
NEIGHBORHOOD/LOC	4067.100	

AREA TYPE	TOTAL GROSS AREA	PCT OF BASE	TOT ADJ AREA	SUBAREA MARKET VALUE
BAS	1,909	100	1,909	204,922
FGR	420	55	231	24,796
FOP	48	30	14	1,503
FSP	224	40	90	9,661
FUS	392	100	392	42,079
PTO	300	5	15	1,610
STR	64	10	6	644
TOTALS	3,357		2,657	285,217

MARKET ADJUSTMENTS

TYPE	MDL	EFF. AREA	TOT ADJ PTS	EFF. BASE RATE	REPL. COST NEW	AYB	EYB	ECON	FNCT		NORM	% COND
0100	01	2,657	120.7584	108.98	289,560	2019	2019	0	0	0	1.50	98.50

1 SINGLE FAM – 100% - 2020 Heated Area: 2301 HX Base Yr 2020

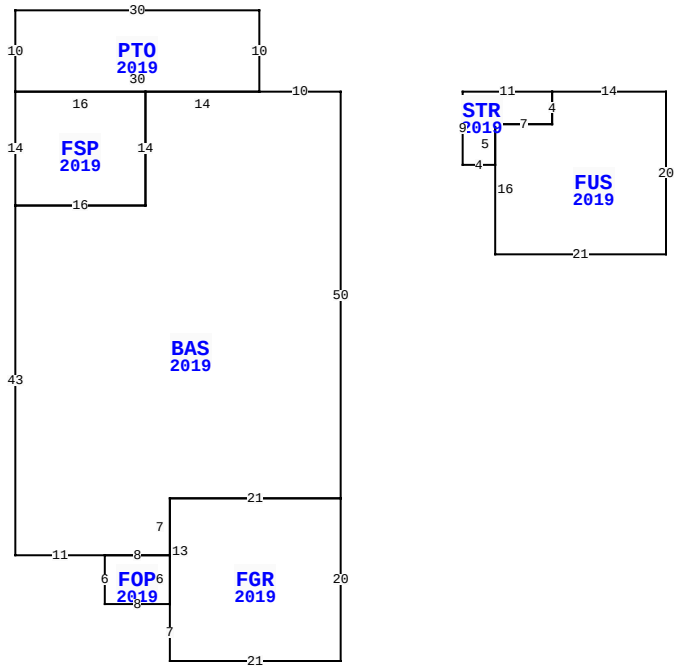

95338 SNAPDRAGON DR, FERNANDINA BEACH

BLD DATE	03/29/2023	NW	LGL DATE
XF DATE			LAND DATE
INC DATE			AG DATE

NASSAU COUNTY PROPERTY

PAGE 1 of 1 4

VALUATION SUMMARY

VALUATION BY		STANDARD
Tax Group: 4	Tax Dist:	
BUILDING MARKET VALUE		285,217
TOTAL MARKET OB/XF VALUE		7,110
TOTAL LAND VALUE - MARKET		75,000
TOTAL MARKET VALUE		367,327
SOH/AGL Deduction		109,917
ASSESSED VALUE		257,410
TOTAL EXEMPTION VALUE	HX HB	50,000
BASE TAXABLE VALUE		207,410
TOTAL JUST VALUE		367,327
NCON VALUE		0
INCOME VALUE		
PREVIOUS YEAR MKT VALUE		339,547

PERMIT NUM	DESCRIPTION	AMT	ISSUED
C1812035	CO ISSUED	0	03/14/2019
18012035	NEW CONSTR	304,659	12/10/2018

SALES DATA

OFF RECORD Number	DATE	TYPE INST	Q U	V I	RSN CD	SALE PRICE
2263/0846	3/21/2019	WD	Q	I	01	302,400
GRANTOR: DREAM FINDERS HOMES L						
GRANTEE: KELLY EDWARD J JR &						
2254/1883	2/08/2019	WD	U	V	30	167,500
GRANTOR: DFH AMELIA LLC						
GRANTEE: DREAM FINDERS HOMES						

BUILDING NOTES

BUILDING DIMENSIONS

BAS=[YR=2019] W10 PTO=[YR=2019] N10 W30 S10 FSP=[YR=2019] S14 E16 N14 W16$ E30$ W14 S14 W16 S43 E11 FOP=[YR=2019] S6 E8 FGR=[YR=2019] S7 E21 N20 W21 S13$ N6 W8$E8 N7 E21 N50$ PTR= E15 STR=[YR=2019] E11 FUS=[YR=2019] E14 S20 W21 N16 E7 N4 $ S4 W7 S5 W4 N9$ W15$.

EXTRA FEATURES

LN	OB/XF CODE	DESCRIPTION	BLD	CAP	L	W	UNITS	UT	Adj R	ADJ UNIT PRICE	ORIG COND	YEAR ON	YEAR ACTUAL	Q	% COND	OB/XF MKT VALUE	NOTES
1	0811	CONCRETE B	0	100	0	0	708.00	SF	5.20	5.20	100	2019	2019	3	99	3,645	
2	0500	FP-PRE FAB	0	100	0	0	1.00	UT	3,500.00	3,500.00	100	2019	2019	3	99	3,465	

LAND DESCRIPTION

TOTAL OB/XF 7,110

LN	USE CODE	CLS	LAND USE DESCRIPTION	CAP	RD	LOC ZONE	FRONT	DEPTH	TOT LND UTS	UNIT TYPE	DT	DPTH FACT	% COND	TOT ADJ	UNIT PRICE	ADJ UNIT PRICE	LAND VALUE	OTHER ADJUSTMENTS AND NOTES	YEAR	DENSITY	DECL	FRZ	YR	CONSRV
1	000100	C	SFR	100			0.00	0.00	1.00	LT		1.00	1.00	1.00	75,000.00	75,000.00	75,000							

REVIEW DATE 04/22/2019 BY TW Total Acres: 0.00 Total Land Value: 75,000 Market: 0 Agricultural: 0 Common: 75,000 PRINTED 08/02/2023 BY SYS