PT NE1/4 OF SEC 30-2N-25E
IN OR 770/290

HARDAGE CHARLES J III & KAREN
45069 BUTLER LANE
CALLAHAN, FL 32011

**2023**

**30-2N-25-0000-0003-0050**

# NASSAU COUNTY PROPERTY



## BUILDING CHARACTERISTICS

| ELEMENT | CD | CONSTRUCTION |
|---|---|---|
| Exterior Wall | 20 | FACE BRICK 100 |
| Roof Structur | 08 | IRREGULAR 100 |
| Roof Cover | 03 | COMP SHNGL 100 |
| Interior Wall | 05 | DRYWALL 100 |
| Interior Floo | 14 | CARPET 80 |
| Interior Floo | 02 | MIN PLYWD 20 |
| Air Condition | 03 | CENTRAL 100 |
| Heating Type | 04 | AIR DUCTED 100 |
| Bedrooms | | 5 100 |
| Bathrooms | | 3 100 |
| Frame | 02 | WOOD FRAME 100 |
| Stories | 2. | 2. 100 |
| Units | | 0 100 |
| Occupancy | 00 | NONE 100 |
| Quality | 03 | Quality Level 03 |
| DOR CODE | 0100 | SINGLE FAMILY |
| MAP NUM | | MKT AREA 07 |
| NEIGHBORHOOD/LOC | 7001.00 | |

| AREA TYPE | TOTAL GROSS AREA | PCT OF BASE | TOT ADJ AREA | SUBAREA MARKET VALUE |
|---|---|---|---|---|
| BAL | 192 | 15 | 29 | 2,235 |
| BAS | 1,848 | 100 | 1,848 | 142,382 |
| BAS | 1,400 | 100 | 1,400 | 107,865 |
| DCK | 192 | 10 | 19 | 1,464 |
| DCK | 568 | 10 | 57 | 4,391 |
| FGR | 506 | 55 | 278 | 21,419 |
| FOP | 144 | 30 | 43 | 3,313 |
| FST | 144 | 55 | 79 | 6,087 |
| FUS | 769 | 100 | 769 | 59,249 |
| FUS | 768 | 100 | 768 | 59,172 |
| TOTALS | 7,957 | | 5,575 | 429,534 |

## MARKET ADJUSTMENTS

| TYPE | MDL | EFF. AREA | TOT ADJ PTS | EFF. BASE RATE | REPL. COST NEW | AYB | EYB | ECON | FNCT | | NORM | % COND |
|---|---|---|---|---|---|---|---|---|---|---|---|---|
| 0100 | 01 | 5,575 | 99.5600 | 89.85 | 500,914 | 1990 | 2003 | 0 | 0 | 0 | 14.25 | 85.75 |

1 SINGLE FAM – 100% - 1997 Heated Area: 4785 HX Base Yr 1997

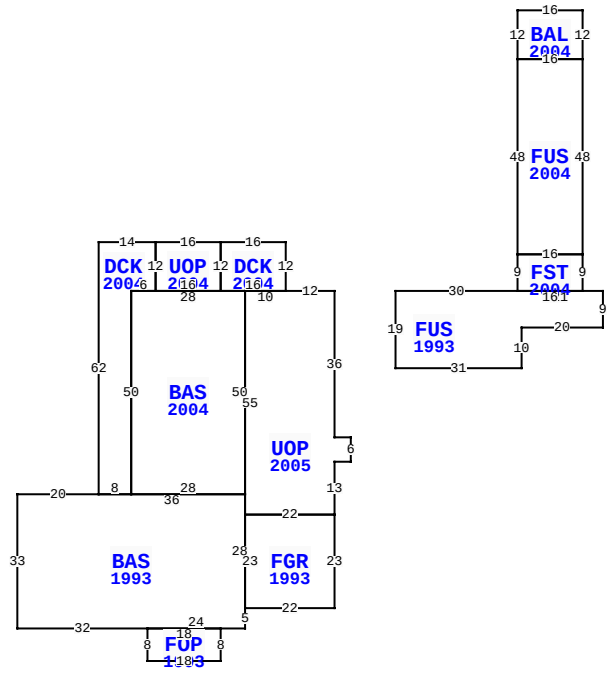


** This building has 12 Sub-Areas

45069 BUTLER LN, CALLAHAN

| | | | |
|---|---|---|---|
| BLD DATE | | LGL DATE | |
| XF DATE | | LAND DATE | |
| INC DATE | | AG DATE | |

## VALUATION SUMMARY

| | | |
|---|---|---|
| VALUATION BY | | STANDARD |
| Tax Group: 1 | Tax Dist: | |
| BUILDING MARKET VALUE | | 429,534 |
| TOTAL MARKET OB/XF VALUE | | 22,207 |
| TOTAL LAND VALUE - MARKET | | 63,000 |
| TOTAL MARKET VALUE | | 514,741 |
| SOH/AGL Deduction | | 225,425 |
| ASSESSED VALUE | | 289,316 |
| TOTAL EXEMPTION VALUE | HX HB | 50,000 |
| BASE TAXABLE VALUE | | 239,316 |
| TOTAL JUST VALUE | | 514,741 |
| NCON VALUE | | 0 |
| INCOME VALUE | | |
| PREVIOUS YEAR MKT VALUE | | 432,980 |

| PERMIT NUM | DESCRIPTION | AMT | ISSUED |
|---|---|---|---|
| R4198 | REPAIR/RRF | 0 | 06/01/2018 |
| B2568 | ADDITION | 50,000 | 03/16/2003 |
| P2568 | NEW CONSTR | 0 | 03/16/2003 |

## SALES DATA

| OFF RECORD Number | DATE | TYPE INST | Q U | V I | RSN CD | SALE PRICE |
|---|---|---|---|---|---|---|
| 0770/0290 | 9/04/1996 | WD | Q | I | | 152,900 |
| GRANTOR: POPE GREGORY A & JAMI | | | | | | |
| GRANTEE: HARDAGE CHARLES III | | | | | | |
| 0670/0057 | 11/10/1992 | WD | U | I | | 85,000 |
| GRANTOR: HIGGINBOTHAM WAYNE | | | | | | |
| GRANTEE: POPE GREGORY & JAMI | | | | | | |

## BUILDING NOTES

## BUILDING DIMENSIONS

UOP=[YR=2005] W12 DCK=[YR=2004] N12 W16 UOP=[YR=2004] W16 DCK=[YR=2004] W14 S62 BAS=[YR=1993] W20 S33 E32 FOP=[YR=1993] S8 E18 N8 W18 $ E24 N5 FGR=[YR=1993] E22 N23 W22 S23 $ N28 BAS=[YR=2004] N50 W28 S50 E28 $ W36 $ E8 N50 E6 N12 $ S12 E16 N12 $ S12 E16 $ W10 S55 E22 N13 E4 N6 W4 N36 $ PTR= E15 FUS=[YR=1993] E30 FST=[YR=2004] N9 FUS=[YR=2004] N48 BAL=[YR=2004] N12 E16 S12 W16 $ E16 S48 W16 $ E16 S9 W16 $ E21 S9 W20 S10 W31 N19 $ W15 $ .

## EXTRA FEATURES

| LN | OB/XF CODE | DESCRIPTION | BLD | CAP | L | W | UNITS | UT | Adj R | ADJ UNIT PRICE | ORIG COND | YEAR ON | YEAR ACTUAL | Q | % COND | OB/XF MKT VALUE | NOTES |
|---|---|---|---|---|---|---|---|---|---|---|---|---|---|---|---|---|---|
| 1 | 0812 | CONCRETE C | 0 | 100 | 0 | 0 | 1,668.00 | SF | 4.00 | 4.00 | 100 | 1992 | 1992 | 3 | 66 | 4,404 | |
| 2 | 0812 | CONCRETE C | 0 | 100 | 0 | 0 | 4,817.00 | SF | 4.00 | 4.00 | 100 | 1994 | 1994 | 3 | 70 | 13,488 | |
| 3 | 0500 | FP-PRE FAB | 0 | 100 | 0 | 0 | 1.00 | UT | 3,500.00 | 3,500.00 | 100 | 2004 | 2004 | 3 | 89 | 3,115 | |
| 4 | 0479 | VF PICKET | 0 | 100 | 0 | 0 | 48.00 | LF | 10.00 | 10.00 | 100 | 2003 | 2003 | 3 | 64 | 307 | |
| 5 | 1242 | WD DECK A | 0 | 100 | 0 | 0 | 288.00 | SF | 10.00 | 10.00 | 100 | 2006 | 2006 | 3 | 31 | 893 | |

## LAND DESCRIPTION

TOTAL OB/XF 22,207

| LN | USE CODE | CLS | LAND USE DESCRIPTION | CAP | RD | LOC ZONE | FRONT | DEPTH | TOT LND UTS | UNIT TYPE | DT | DPTH FACT | % COND | TOT ADJ | UNIT PRICE | ADJ UNIT PRICE | LAND VALUE | OTHER ADJUSTMENTS AND NOTES | YEAR | DENSITY | DECL | FRZ | YR | CONSRV |
|---|---|---|---|---|---|---|---|---|---|---|---|---|---|---|---|---|---|---|---|---|---|---|---|---|
| 1 | 000115 | C | SFR ACRES | 100 | 0006 | | 0.00 | 0.00 | 3.50 | AC | | 1.00 | 1.00 | 1.00 | 18,000.00 | 18,000.00 | 63,000 | | | | | | | |

REVIEW DATE 01/14/2021 BY KWA Total Acres: 3.50 Total Land Value: 63,000 Market: 0 Agricultural: 0 Common: 63,000 PRINTED 08/02/2023 BY SYS