LOT 37
AMELIA OAKS PBK 8/85

CLELAND JOSHUA J
1913 AMELIA OAKS DRIVE
FERNANDINA BEACH, FL 32034

2023

29-3N-28-0100-0037-0000

NASSAU COUNTY PROPERTY

BUILDING CHARACTERISTICS

ELEMENT	CD	CONSTRUCTION
Exterior Wall	10	ABOVE AVG 100
Roof Structur	08	IRREGULAR 100
Roof Cover	11	SLATE 100
Interior Wall	05	DRYWALL 100
Interior Floo	11	CLAY TILE 60
Interior Floo	14	CARPET 40
Air Condition	03	CENTRAL 100
Heating Type	04	AIR DUCTED 100
Bedrooms		3 100
Bathrooms		2.5 100
Frame	02	WOOD FRAME 100
Stories	2.	2. 100
Units		0 100
Occupancy	00	NONE 100
Quality	04	Quality Level 04

DOR CODE	0100	SINGLE FAMILY	
MAP NUM		MKT AREA	01
NEIGHBORHOOD/LOC	2104.00		

AREA TYPE	TOTAL GROSS AREA	PCT OF BASE	TOT ADJ AREA	SUBAREA MARKET VALUE
BAS	1,034	100	1,034	191,834
FGR	242	55	133	24,675
FOP	152	30	46	8,534
FSP	180	40	72	13,358
FUS	1,135	100	1,135	210,572
STP	28	10	3	556
STR	24	10	2	371
TOTALS	2,795		2,425	449,901

MARKET ADJUSTMENTS

TYPE	MDL	EFF. AREA	TOT ADJ PTS	EFF. BASE RATE	REPL. COST NEW	AYB	EYB	ECON	FNCT		NORM	% COND
0500	01	2,425	131.5062	187.40	454,445	2019	2019	0	0	0	1.00	99.00

1 SFR CUST - 100% - 2022 Heated Area: 2169 HX Base Yr 2022

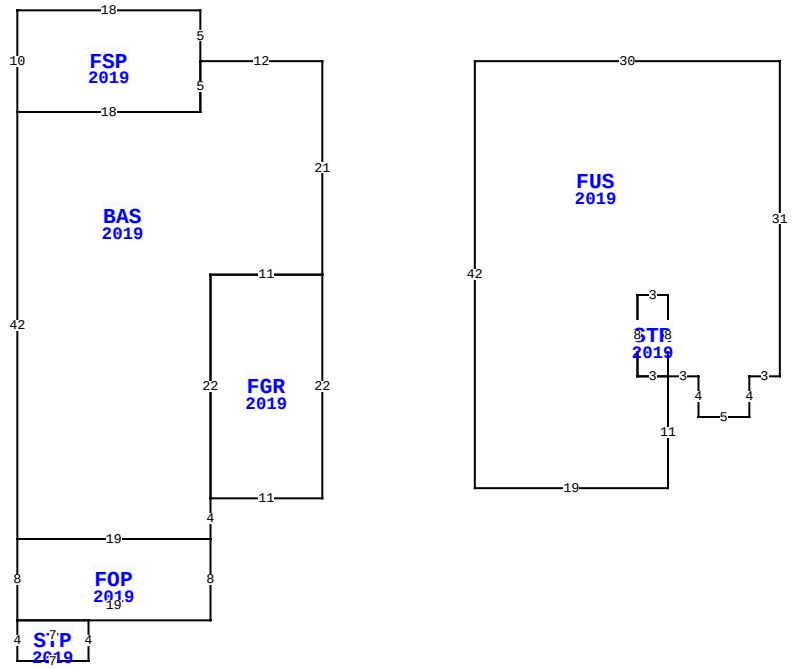

1913 AMELIA OAKS DR, FERNANDINA BEACH

BLD DATE		LGL DATE	
XF DATE		LAND DATE	
INC DATE		AG DATE	

VALUATION SUMMARY

VALUATION BY		STANDARD
Tax Group: 2	Tax Dist:	
BUILDING MARKET VALUE		449,901
TOTAL MARKET OB/XF VALUE		4,464
TOTAL LAND VALUE - MARKET		200,000
TOTAL MARKET VALUE		654,365
SOH/AGL Deduction		75,244
ASSESSED VALUE		579,121
TOTAL EXEMPTION VALUE	HX HB	50,000
BASE TAXABLE VALUE		529,121
TOTAL JUST VALUE		654,365
NCON VALUE		0
INCOME VALUE		
PREVIOUS YEAR MKT VALUE		562,253

PERMIT NUM	DESCRIPTION	AMT	ISSUED
20172251	NEW CONSTR	244,728	07/24/2017

SALES DATA

OFF RECORD Number	DATE	TYPE INST	Q U	V I	RSN CD	SALE PRICE
2476/1371	6/30/2021	WD	Q	I	01	650,000
GRANTOR: SHIELDS FAMILY LIVING						
GRANTEE: CLELAND JOSHUA J						
2271/1973	4/29/2019	SW	Q	I	02	463,500
GRANTOR: D & H HOMES LLC						
GRANTEE: SHIELDS FAMILY LIVI						

BUILDING NOTES

BUILDING DIMENSIONS

BAS=[YR=2019] W12 FSP=[YR=2019] N5 W18 S10 E18 N5$ S5 W18 S42 FOP=[YR=2019] S8 STP=[YR=2019] S4 E7 N4 W7$ E19 N8 W19$ E19 N4 FGR=[YR=2019] N22 E11 S22 W11$ N22 E11 N21$ PTR=E15 FUS=[YR=2019] E30 S31 W3 S4 W5 N4 W3 STR=[YR=2019] W3 N8 E3 S8$ N8 W3 S8 E3 S11 W19 N42$ W15$.

EXTRA FEATURES

LN	OB/XF CODE	DESCRIPTION	BLD	CAP	L	W	UNITS	UT	Adj R	ADJ UNIT PRICE	ORIG COND	YEAR ON	YEAR ACTUAL	Q	% COND	OB/XF MKT VALUE	NOTES
1	0504	FP-ELECTRI	0	100	0	0	1.00	UT	2,000.00	2,000.00	100	2019	2019	3	99	1,980	
2	0855	CONC PAVER	0	100	0	0	237.00	SF	7.00	7.00	100	2019	2019	3	99	1,642	
3	0855	CONC PAVER	0	100	0	0	24.00	SF	7.00	7.00	100	2019	2019	3	99	166	
4	0476	VF 6 SBPL	0	100	0	0	6.00	LF	32.00	32.00	100	2019	2019	3	96	184	
5	0471	VINYL FNC	0	100	0	0	1.00	LF	32.00	32.00	100	2019	2019	3	96	31	
6	0479	VF PICKET	0	100	0	0	48.00	LF	10.00	10.00	100	2019	2019	3	96	461	

LAND DESCRIPTION

TOTAL OB/XF 4,464

LN	USE CODE	CLS	LAND USE DESCRIPTION	CAP	RD	LOC ZONE	FRONT	DEPTH	TOT LND UTS	UNIT TYPE	DT	DPTH FACT	% COND	TOT ADJ	UNIT PRICE	ADJ UNIT PRICE	LAND VALUE	OTHER ADJUSTMENTS AND NOTES	YEAR	DENSITY	DECL	FRZ	YR	CONSRV
1	000100	C	SFR	100			0.00	0.00	1.00	LT		1.00	1.00	1.00	200,000.00	200,000.00	200,000							

REVIEW DATE 06/14/2019 BY DJ Total Acres: 0.00 Total Land Value: 200,000 Market: 0 Agricultural: 0 Common: 200,000 PRINTED 08/02/2023 BY SYS