LOT 27
AMELIA OAKS PBK 8/85

REESE FREDRICK L & BETTY L
1961 AMELIA OAKS DR
FERNANDINA BEACH, FL 32034

2023

29-3N-28-0100-0027-0000

NASSAU COUNTY PROPERTY

BUILDING CHARACTERISTICS

ELEMENT	CD	CONSTRUCTION
Exterior Wall	10	ABOVE AVG 100
Roof Structur	08	IRREGULAR 100
Roof Cover	12	MODULAR MT 100
Interior Wall	05	DRYWALL 100
Interior Floo	12	HARDWOOD 80
Interior Floo	11	CLAY TILE 20
Air Condition	03	CENTRAL 100
Heating Type	04	AIR DUCTED 100
Bedrooms		4 100
Bathrooms		3 100
Frame	02	WOOD FRAME 100
Stories	2.	2. 100
Units		0 100
Occupancy	00	NONE 100
Quality	03	Quality Level 03
DOR CODE	0100	SINGLE FAMILY
MAP NUM		MKT AREA 01
NEIGHBORHOOD/LOC	2104.00	

AREA TYPE	TOTAL GROSS AREA	PCT OF BASE	TOT ADJ AREA	SUBAREA MARKET VALUE
BAS	1,237	100	1,237	188,801
FGR	390	55	214	32,662
FOP	152	30	46	7,021
FSP	230	40	92	14,042
FUS	1,537	100	1,537	234,589
STP	16	10	2	305
STP	21	10	2	305
STR	28	10	3	458
TOTALS	3,611		3,133	478,185

MARKET ADJUSTMENTS

TYPE	MDL	EFF. AREA	TOT ADJ PTS	EFF. BASE RATE	REPL. COST NEW	AYB	EYB	ECON	FNCT		NORM	% COND
0500	01	3,133	108.1920	154.17	483,015	2019	2019	0	0	0	1.00	99.00

1 SFR CUST – 100% - 2021 Heated Area: 2774 HX Base Yr 2021

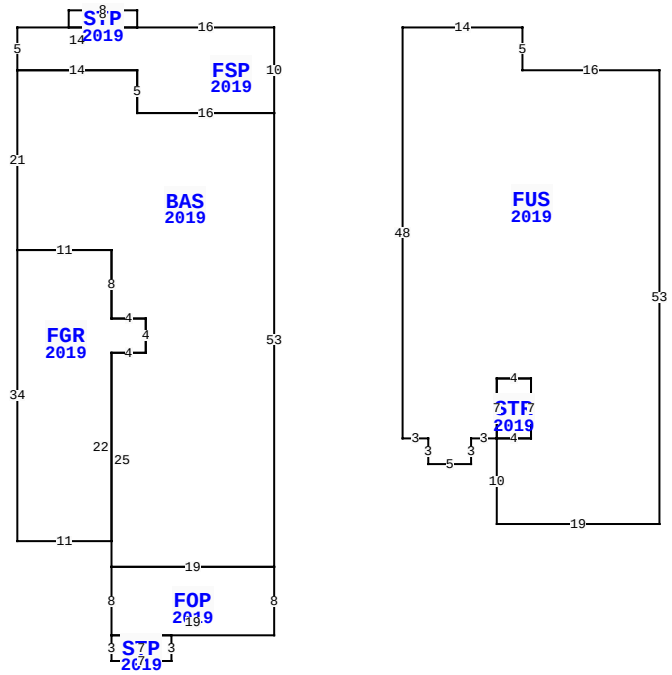

1961 AMELIA OAKS DR, FERNANDINA BEACH

BLD DATE		LGL DATE	
XF DATE		LAND DATE	
INC DATE		AG DATE	

VALUATION SUMMARY

VALUATION BY		STANDARD
Tax Group: 2	Tax Dist:	
BUILDING MARKET VALUE		478,185
TOTAL MARKET OB/XF VALUE		3,830
TOTAL LAND VALUE - MARKET		200,000
TOTAL MARKET VALUE		682,015
SOH/AGL Deduction		126,438
ASSESSED VALUE		555,577
TOTAL EXEMPTION VALUE	HX HB	50,000
BASE TAXABLE VALUE		505,577
TOTAL JUST VALUE		682,015
NCON VALUE		0
INCOME VALUE		
PREVIOUS YEAR MKT VALUE		586,878

PERMIT NUM	DESCRIPTION	AMT	ISSUED
20190568	SCRN UNDER	0	10/02/2019
20181660	NEW CONSTR	352,301	05/17/2018

SALES DATA

OFF RECORD Number	DATE	TYPE INST	Q U	V I	RSN CD	SALE PRICE
2387/1536	8/28/2020	WD	Q	I	01	645,000
GRANTOR: MYERS GARY A & EILEEN						
GRANTEE: REESE FREDRICK L &						
2294/0145	7/30/2019	SW	Q	I	01	577,400
GRANTOR: D & H HOMES LLC						
GRANTEE: MYERS GARY A & EILE						

BUILDING NOTES

BUILDING DIMENSIONS

FSP=[YR=2019] W16 STP=[YR=2019] N2 W8 S2 E8$ W14 S5
BAS=[YR=2019] S21 FGR=[YR=2019] S34 E11 N22 E4 N4 W4 N8 W11$
E11 S8 E4 S4 W4 S25 FOP=[YR=2019] S8 STP=[YR=2019] S3 E7 N3
W7 $ E19 N8 W19$ E19 N53 W16 N5 W14$ E14 S5 E16 N10$ PTR=E15
FUS=[YR=2019] E14 S5 E16 S53 W19 N10 STR=[YR=2019] N7 E4 S7
W4$ E4 N7 W4 S7 W3 S3 W5 N3 W3 N48$ W15$.

EXTRA FEATURES

LN	OB/XF CODE	DESCRIPTION	BLD	CAP	L	W	UNITS	UT	Adj R	ADJ UNIT PRICE	ORIG COND	YEAR ON	YEAR ACTUAL	Q	% COND	OB/XF MKT VALUE	NOTES
1	0855	CONC PAVER	0	100	0	0	243.00	SF	7.00	7.00	100	2019	2019	3	99	1,684	
2	0855	CONC PAVER	0	100	8	3	24.00	SF	7.00	7.00	100	2019	2019	3	99	166	
3	0504	FP-ELECTRI	0	100	0	0	1.00	UT	2,000.00	2,000.00	100	2019	2019	3	99	1,980	

LAND DESCRIPTION

TOTAL OB/XF 3,830

LN	USE CODE	CLS	LAND USE DESCRIPTION	CAP	RD	LOC ZONE	FRONT	DEPTH	TOT LND UTS	UNIT TYPE	DT	DPTH FACT	% COND	TOT ADJ	UNIT PRICE	ADJ UNIT PRICE	LAND VALUE	OTHER ADJUSTMENTS AND NOTES	YEAR	DENSITY	DECL	FRZ	YR	CONSRV
1	000100	C	SFR	100			0.00	0.00	1.00	LT		1.00	1.00	1.00	200,000.00	200,000.00	200,000							

REVIEW DATE 10/29/2019 BY DJ Total Acres: 0.00 Total Land Value: 200,000 Market: 0 Agricultural: 0 Common: 200,000 PRINTED 08/02/2023 BY SYS