LOT 22
IN OR 2137/19
AMELIA OAKS PBK 8/85

GARCIA ANDRES A/YAN LILLIAN S
877 WRITER CT
VERNON HILLS, IL 60061

2023

29-3N-28-0100-0022-0000

NASSAU COUNTY PROPERTY

BUILDING CHARACTERISTICS

ELEMENT	CD	CONSTRUCTION
Exterior Wall	10	ABOVE AVG 100
Roof Structur	03	GABLE/HIP 100
Roof Cover	11	SLATE 100
Interior Wall	05	DRYWALL 100
Interior Floo	11	CLAY TILE 60
Interior Floo	14	CARPET 40
Air Condition	03	CENTRAL 100
Heating Type	04	AIR DUCTED 100
Bedrooms		3 100
Bathrooms		2.5 100
Frame	02	WOOD FRAME 100
Stories	2.	2. 100
Units		0 100
Occupancy	00	NONE 100
Quality	03	Quality Level 03
DOR CODE	0100	SINGLE FAMILY
MAP NUM		MKT AREA 01
NEIGHBORHOOD/LOC	2104.00	

AREA TYPE	TOTAL GROSS AREA	PCT OF BASE	TOT ADJ AREA	SUBAREA MARKET VALUE
BAS	1,033	100	1,033	174,214
FGR	242	55	133	22,430
FOP	152	30	46	7,758
FOP	162	30	49	8,263
FOP	180	30	54	9,107
FUS	1,135	100	1,135	191,416
STP	6	10	1	169
STP	12	10	1	169
STR	24	10	2	337
TOTALS	2,946		2,454	413,863

MARKET ADJUSTMENTS

TYPE	MDL	EFF. AREA	TOT ADJ PTS	EFF. BASE RATE	REPL. COST NEW	AYB	EYB	ECON	FNCT		NORM	% COND
0500	01	2,454	120.7680	172.09	422,309	2017	2017	0	0	0	2.00	98.00

1 SFR CUST – 0% - 0 Heated Area: 2168 HX Base Yr

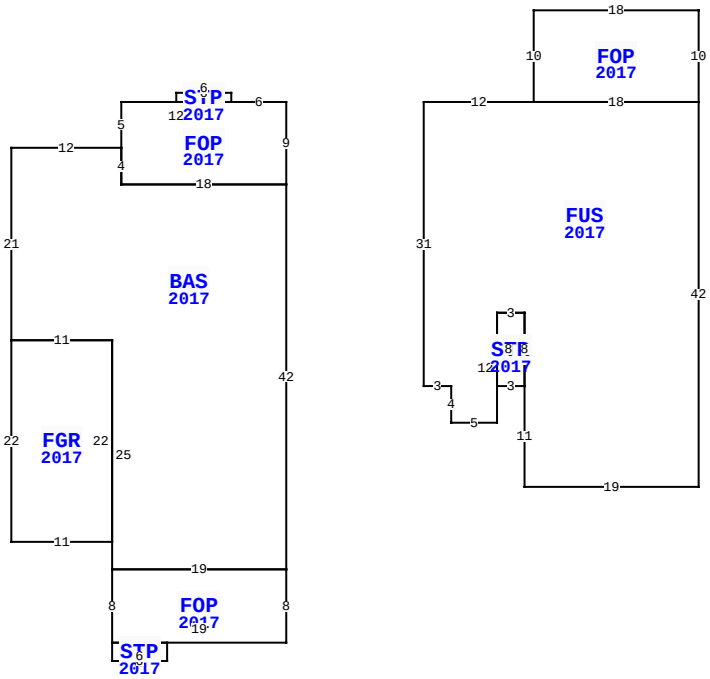

1942 AMELIA OAKS DR, FERNANDINA BEACH

BLD DATE		LGL DATE	
XF DATE		LAND DATE	
INC DATE		AG DATE	

VALUATION SUMMARY

VALUATION BY	STANDARD
Tax Group: 2	Tax Dist:
BUILDING MARKET VALUE	413,863
TOTAL MARKET OB/XF VALUE	4,079
TOTAL LAND VALUE - MARKET	200,000
TOTAL MARKET VALUE	617,942
SOH/AGL Deduction	122,608
ASSESSED VALUE	495,334
TOTAL EXEMPTION VALUE	0
BASE TAXABLE VALUE	495,334
TOTAL JUST VALUE	617,942
NCON VALUE	0
INCOME VALUE	
PREVIOUS YEAR MKT VALUE	529,596

PERMIT NUM	DESCRIPTION	AMT	ISSUED
20160556	NEW CONSTR	246,329	03/02/2016

SALES DATA

OFF RECORD Number	DATE	TYPE INST	Q U	V I	RSN CD	SALE PRICE
2137/0019	7/28/2017	SW	Q	I	01	439,000

GRANTOR: D & H HOMES LLC
GRANTEE: GARCIA ANDRES A & L

BUILDING NOTES

BUILDING DIMENSIONS

FOP=[YR=2017] W6 STP=[YR=2017] N1 W6 S1 E6 $ W12 S5
BAS=[YR=2017] W12 S21 FGR=[YR=2017] S22 E11 N22 W11$ E11 S25
FOP=[YR=2017] S8 STP=[YR=2017] S2 E6 N2 W6$ E19 N8 W19$ E19
N42 W18 N4$ S4 E18 N9$ PTR=E15 FUS=[YR=2017] E12
FOP=[YR=2017] N10 E18 S10 W18$ E18 S42 W19 N11 STR=[YR=2017]
W3 N8 E3 S8$ N8 W3 S12 W5 N4 W3 N31$ W15$.

EXTRA FEATURES

LN	OB/XF CODE	DESCRIPTION	BLD	CAP	L	W	UNITS	UT	Adj R	ADJ UNIT PRICE	ORIG COND	YEAR ON	YEAR ACTUAL	Q	% COND	OB/XF MKT VALUE	NOTES
1	0504	FP-ELECTRI	0	0	0	0	1.00	UT	2,000.00	2,000.00	100	2017	2017	3	98	1,960	
2	0855	CONC PAVER	0	0	0	0	288.00	SF	7.00	7.00	100	2017	2017	3	97	1,956	
3	0855	CONC PAVER	0	0	0	0	24.00	SF	7.00	7.00	100	2017	2017	3	97	163	

LAND DESCRIPTION

TOTAL OB/XF 4,079

LN	USE CODE	CLS	LAND USE DESCRIPTION	CAP	RD	LOC ZONE	FRONT	DEPTH	TOT LND UTS	UNIT TYPE	DT	DPTH FACT	% COND	TOT ADJ	UNIT PRICE	ADJ UNIT PRICE	LAND VALUE	OTHER ADJUSTMENTS AND NOTES	YEAR	DENSITY	DECL	FRZ	YR	CONSRV
1	000100	C	SFR	0			0.00	0.00	1.00	LT		1.00	1.00	1.00	200,000.00	200,000.00	200,000							

REVIEW DATE 10/23/2017 BY DJ Total Acres: 0.00 Total Land Value: 200,000 Market: 0 Agricultural: 0 Common: 200,000 PRINTED 08/02/2023 BY SYS