PT OF GOV'T LOT 5
OR 1548/1576
FOOD LION LEASED PROPERTY

SADLER SQUARE LAND TRUST/PROPERTY MANAGEMENT SUPPO
1 SLEIMAN PARKWAY STE #270
JACKSONVILLE, FL 32216

2023

29-3N-28-0000-0004-0080

NASSAU COUNTY PROPERTY

BUILDING CHARACTERISTICS

ELEMENT	CD	CONSTRUCTION
Exterior Wall	15	CONC BLOCK 70
Exterior Wall	17	CB STUCCO 30
Roof Structur	09	RIDGE FRME 100
Roof Cover	04	BUILT-UP 100
Interior Wall	05	DRYWALL 100
Interior Floo	07	CORK/VTILE 80
Interior Floo	14	CARPET 20
Ceiling	01	FIN.SUSPD 100
Air Condition	04	ROOF TOP 100
Heating Type	04	AIR DUCTED 100
Fixtures		19 100
Frame	03	MASONRY 100
Story Height		14 100
RMS		13 100
Stories	1.	1. 100
Units		0 100
BUD8 Adjustme	02	DIST FB 100
Occupancy	00	NONE 100
Quality	03	Quality Level 03

DOR CODE	1600	COMMUNITY SHOPPING	
MAP NUM		MKT AREA	01
NEIGHBORHOOD/LOC	2004.00		

AREA TYPE	TOTAL GROSS AREA	PCT OF BASE	TOT ADJ AREA	SUBAREA MARKET VALUE
BAS	9,675	100	9,675	556,216
BAS	1,765	100	1,765	101,470
CAN	1,350	30	405	23,284
TOTALS	12,790		11,845	680,969

MARKET ADJUSTMENTS

TYPE	MDL	EFF. AREA	TOT ADJ PTS	EFF. BASE RATE	REPL. COST NEW	AYB	EYB	ECON	FNCT		NORM	% COND
1601	04	11,845	98.2695	114.98	1,361,938	1987	1987	0	0	0	50.00	50.00

1 COMNTYSHOP – 0% - 0 Heated Area: 11440 HX Base Yr

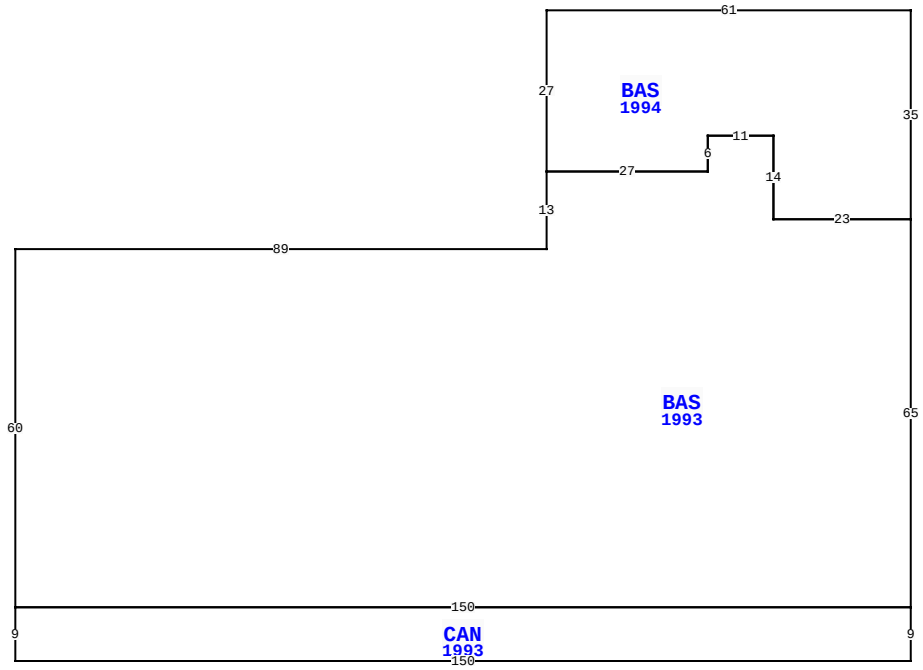

2100 SADLER SQ, FERNANDINA BEACH

BLD DATE	06/30/2021	KK	LGL DATE	
XF DATE	06/30/2021	KK	LAND DATE	06/30/2021 KK
INC DATE			AG DATE	

EXTRA FEATURES

LN	OB/XF CODE	DESCRIPTION	BLD	CAP	L	W	UNITS	UT	Adj R	ADJ UNIT PRICE	ORIG COND	YEAR ON	YEAR ACTUAL	Q	% COND	OB/XF MKT VALUE	NOTES
1	0811	CONCRETE B	0	0	0	0	706.00	SF	5.20	5.20	100	1987	1987	3	54.5	2,001	
2	0811	CONCRETE B	0	0	0	0	550.00	SF	5.20	5.20	100	1987	1987	3	54.5	1,559	
3	0803	ASPHALT C	0	0	0	0	254,167.00	SF	2.00	2.00	100	1987	1987	3	50	254,167	
4	0972	ST LGHT UN	0	0	0	0	21.00	UT	2,530.00	2,530.00	100	1987	1987	3	26	13,814	
5	0400	CONC CURB	0	0	0	0	4,526.00	LF	15.00	15.00	100	1987	1987	3	64	43,450	
6	4950	BOLLARD	0	0	0	0	9.00	UT	100.00	100.00	100	1987	1987	3	100	900	
7	0418	EXHST FAN	0	0	0	0	2.00	UT	400.00	400.00	100	1987	1987	3	20	160	
16	0966	FIRE SPRNK	0	0	0	0	11,440.00	SF	3.00	3.00	100	1987	1987	3	60	20,592	
19	0430	CL FNC 6B	0	0	0	0	51.00	LF	9.70	9.70	100	1990	1990	3	28	139	
20	0819	CONC 12"	0	0	0	0	221.00	SF	9.50	9.50	100	1990	1990	3	62	1,302	

TOTAL OB/XF 338,084

VALUATION SUMMARY

VALUATION BY	DIRECT_CAP
Tax Group: 2	Tax Dist:
BUILDING MARKET VALUE	0
TOTAL MARKET OB/XF VALUE	0
TOTAL LAND VALUE - MARKET	0
TOTAL MARKET VALUE	4,827,231
SOH/AGL Deduction	0
ASSESSED VALUE	4,827,231
TOTAL EXEMPTION VALUE	0
BASE TAXABLE VALUE	4,827,231
TOTAL JUST VALUE	4,827,231
NCON VALUE	0
INCOME VALUE	4,827,231
PREVIOUS YEAR MKT VALUE	4,827,223

PERMIT NUM	DESCRIPTION	AMT	ISSUED
20200136	REMODEL-2134 SADL	8,000	12/16/2020
20180486	REMODEL-LOTTS FUR	500,000	02/12/2018
20180455	REPAIR/RRF	28,000	02/08/2018
20180313	REPAIR/RRF	293,750	01/26/2018
20173379	REMODEL	364,300	10/30/2017
20173380	REMODEL-INT BLD O	556,500	10/30/2017

SALES DATA

OFF RECORD Number	DATE	TYPE INST	Q / U	V / I	RSN CD	SALE PRICE
1548/1576	1/31/2008	WD	U	I	02	100
GRANTOR: SOUTHEASTERN PROPERTY						
GRANTEE: PROPERTY MANAGEMENT						
1548/1576	1/31/2008	WD	U	I	02	100
GRANTOR: SOUTHEASTERN PROPERTY						
GRANTEE: PROPERTY MANAGEMENT						

BUILDING NOTES

BUILDING DIMENSIONS

BAS=[YR=1994] W61 S27 BAS=[YR=1993] S13 W89 S60
CAN=[YR=1993] S9 E150 N9 W150$ E150 N65 W23 N14 W11 S6 W27$
E27 N6 E11 S14 E23 N35$.

LAND DESCRIPTION

LN	USE CODE	CLS	LAND USE DESCRIPTION	CAP	RD	LOC ZONE	FRONT	DEPTH	TOT LND UTS	UNIT TYPE	DT	DPTH FACT	% COND	TOT ADJ	UNIT PRICE	ADJ UNIT PRICE	LAND VALUE	OTHER ADJUSTMENTS AND NOTES	YEAR	DENSITY	DECL	FRZ	YR	CONSRV
1	001600	C	SH CTR COM	0	0003		0.00	0.00	541,880.00	SF		1.00	1.00	1.00	7.00	7.00	3,793,160							

REVIEW DATE 06/30/2021 BY KK Total Acres: 0.00 Total Land Value: 0 Market: 0 Agricultural: 0 Common: 0 PRINTED 08/02/2023 BY SYS

PT OF GOV'T LOT 5
OR 1548/1576
FOOD LION LEASED PROPERTY

SADLER SQUARE LAND TRUST/PROPERTY MANAGEMENT SUPPO
1 SLEIMAN PARKWAY STE #270
JACKSONVILLE, FL 32216

2023

29-3N-28-0000-0004-0080

NASSAU COUNTY PROPERTY

BUILDING CHARACTERISTICS

ELEMENT	CD	CONSTRUCTION
Exterior Wall	15	CONC BLOCK 80
Exterior Wall	28	GLASS THRM 20
Roof Structur	09	RIDGE FRME 100
Roof Cover	04	BUILT-UP 100
Interior Wall	05	DRYWALL 100
Interior Floo	14	CARPET 90
Interior Floo	07	CORK/VTILE 10
Ceiling	01	FIN.SUSPD 100
Air Condition	04	ROOF TOP 100
Heating Type	04	AIR DUCTED 100
Fixtures		6 100
Frame	03	MASONRY 100
Story Height		15 100
RMS		10 100
Stories	1.	1. 100
Units		0 100
BUD8 Adjustme	02	DIST FB 100
Occupancy	00	NONE 100
Quality	05	Quality Level 05

DOR CODE	1600	COMMUNITY SHOPPING	
MAP NUM		MKT AREA	01
NEIGHBORHOOD/LOC	2004.00		

AREA TYPE	TOTAL GROSS AREA	PCT OF BASE	TOT ADJ AREA	SUBAREA MARKET VALUE
AOF	256	100	256	18,085
BAS	27,917	100	27,917	1,972,197
CAN	76	30	23	1,625
CAN	40	30	12	848
CAN	2,310	30	693	48,957
FST	128	50	64	4,522
FST	1,056	50	528	37,301
SFB	270	80	216	15,260
SFB	2,119	80	1,695	119,744
TOTALS	34,172		31,404	2,218,536

MARKET ADJUSTMENTS

TYPE	MDL	EFF. AREA	TOT ADJ PTS	EFF. BASE RATE	REPL. COST NEW	AYB	EYB	ECON	FNCT		NORM	% COND
1601	04	31,404	120.7602	141.29	4,437,071	1987	1997	0	0	0	50.00	50.00

5 COMNTYSHOP - 0% - 0 Heated Area: 30084 HX Base Yr

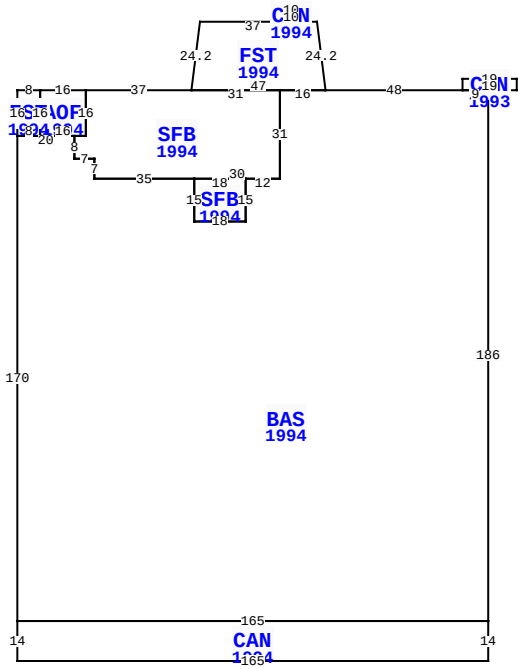

2100 SADLER SQ, FERNANDINA BEACH

BLD DATE	06/30/2021	KK	LGL DATE	
XF DATE	06/30/2021	KK	LAND DATE	06/30/2021 KK
INC DATE			AG DATE	

EXTRA FEATURES

LN	OB/XF CODE	DESCRIPTION	BLD	CAP	L	W	UNITS	UT	Adj R	ADJ UNIT PRICE	ORIG COND	YEAR ON	YEAR ACTUAL	Q	% COND	OB/XF MKT VALUE	NOTES
21	0819	CONC 12"	0	0	0	0	93.00	SF	9.50	9.50	100	2009	2009	3	91	804	
28	0810	CONCRETE A	0	0	0	0	43.00	SF	6.50	6.50	100	2001	2001	3	82	229	
32	6001	ROLLUP DR	0	0	0	0	3.00	UT	400.00	400.00	100	1987	1987	3	20	240	
33	4950	BOLLARD	0	0	0	0	28.00	UT	100.00	100.00	100	1987	1987	3	100	2,800	
34	0964	HALON SYST	0	0	10	3	30.00	SF	50.00	50.00	100	1995	1995	3	72	1,080	
35	0975	ST LT/ARM	0	0	0	0	15.00	UT	500.00	500.00	100	1987	1987	3	26	1,950	
36	0978	SECURTY LT	0	0	0	0	11.00	UT	450.00	450.00	100	1987	1987	3	26	1,287	
37	6001	ROLLUP DR	0	0	0	0	1.00	UT	400.00	400.00	100	1987	1987	3	20	80	
38	0402	CONC BUMPE	0	0	0	0	1.00	UT	25.00	25.00	100	1987	1987	3	64	16	
39	0812	CONCRETE C	0	0	0	0	2,845.00	SF	4.00	4.00	100	2007	2007	3	89	10,128	

TOTAL OB/XF 18,614

LAND DESCRIPTION

LN	USE CODE	CLS	LAND USE DESCRIPTION	CAP	RD	LOC ZONE	FRONT	DEPTH	TOT LND UTS	UNIT TYPE	DT	DPTH FACT	% COND	TOT ADJ	UNIT PRICE	ADJ UNIT PRICE	LAND VALUE	OTHER ADJUSTMENTS AND NOTES	YEAR	DENSITY	DECL	FRZ	YR	CONSRV

NASSAU COUNTY PROPERTY — VALUATION SUMMARY

VALUATION BY	DIRECT_CAP
Tax Group: 2	Tax Dist:
BUILDING MARKET VALUE	0
TOTAL MARKET OB/XF VALUE	0
TOTAL LAND VALUE - MARKET	0
TOTAL MARKET VALUE	4,827,231
SOH/AGL Deduction	0
ASSESSED VALUE	4,827,231
TOTAL EXEMPTION VALUE	0
BASE TAXABLE VALUE	4,827,231
TOTAL JUST VALUE	4,827,231
NCON VALUE	0
INCOME VALUE	4,827,231
PREVIOUS YEAR MKT VALUE	4,827,223

PERMIT NUM	DESCRIPTION	AMT	ISSUED
20162890	REMDL-UF JAX PHYS	282,144	10/25/2016
20162726	REMDL-PINBALL MUS	2,000	10/04/2016
20141792	FIRE SPRNK	2,400	08/14/2014
D0141619	H/AC	5,976	07/24/2014
20130756	H/AC	1,200	04/10/2013
20130757	REMODEL	1,800	04/10/2013

SALES DATA

OFF RECORD Number	DATE	TYPE INST	Q U	V I	RSN CD	SALE PRICE
1548/1576	1/31/2008	WD	U	I	02	100
GRANTOR: SOUTHEASTERN PROPERTY						
GRANTEE: PROPERTY MANAGEMENT						
1548/1576	1/31/2008	WD	U	I	02	100
GRANTOR: SOUTHEASTERN PROPERTY						
GRANTEE: PROPERTY MANAGEMENT						

BUILDING NOTES

BUILDING DIMENSIONS

CAN=[YR=1993] W19 S4 BAS=[YR=1994] W48 FST=[YR=1994] U24 L3 W4 CAN=[YR=1994] N4 W10 S4 E10$ W37 D24 L3 SFB=[YR=1994] W37 AOF=[YR=1994] W16 FST=[YR=1994] W8 S16 E8 N16$ S16 E16 N16$ S16 W4 S8 E7 S7 E35 SFB=[YR=1994] S15 E18 N15 W18$ E30 N31 W31$ E47$ W16 S31 W12 S15 W18 N15 W35 N7 W7 N8 W20 S170 CAN=[YR=1994] S14 E165 N14 W165$ E165 N186 W9$ E19 N4$.

REVIEW DATE 06/30/2021 BY KK Total Acres: 0.00 Total Land Value: 0 Market: 0 Agricultural: 0 Common: 0 PRINTED 08/02/2023 BY SYS

PT OF GOV'T LOT 5
OR 1548/1576
FOOD LION LEASED PROPERTY

SADLER SQUARE LAND TRUST/PROPERTY MANAGEMENT SUPPO
1 SLEIMAN PARKWAY STE #270
JACKSONVILLE, FL 32216

2023

29-3N-28-0000-0004-0080

NASSAU COUNTY PROPERTY

BUILDING CHARACTERISTICS

ELEMENT	CD	CONSTRUCTION
Exterior Wall	15	CONC BLOCK 100
Roof Structur	09	RIDGE FRME 100
Roof Cover	04	BUILT-UP 100
Interior Wall	05	DRYWALL 100
Interior Floo	05	ASPH TILE 70
Interior Floo	03	CONC FINSH 30
Ceiling	01	FIN.SUSPD 100
Air Condition	04	ROOF TOP 100
Heating Type	04	AIR DUCTED 100
Fixtures		85 100
Frame	03	MASONRY 100
Story Height		14 100
RMS		47 100
Stories	1.	1. 100
Units		0 100
BUD8 Adjustme	02	DIST FB 100
Occupancy	00	NONE 100
Quality	03	Quality Level 03
DOR CODE	1600	COMMUNITY SHOPPING
MAP NUM		MKT AREA 01
NEIGHBORHOOD/LOC	2004.00	

AREA TYPE	TOTAL GROSS AREA	PCT OF BASE	TOT ADJ AREA	SUBAREA MARKET VALUE
BAS	1,400	100	1,400	78,183
BAS	27,044	100	27,044	1,510,272
BAS	200	100	200	11,169
CAN	180	30	54	3,016
CAN	3,150	30	945	52,774
FST	169	50	84	4,691
FST	127	50	64	3,574
FST	694	50	347	19,378
TOTALS	32,964		30,138	1,683,056

MARKET ADJUSTMENTS

TYPE	MDL	EFF. AREA	TOT ADJ PTS	EFF. BASE RATE	REPL. COST NEW	AYB	EYB	ECON	FNCT		NORM	% COND
1601	04	30,138	95.4608	111.69	3,366,113	1987	1987	0	0	0	50.00	50.00

6 COMNTYSHOP - 0% - 0 Heated Area: 28644 HX Base Yr

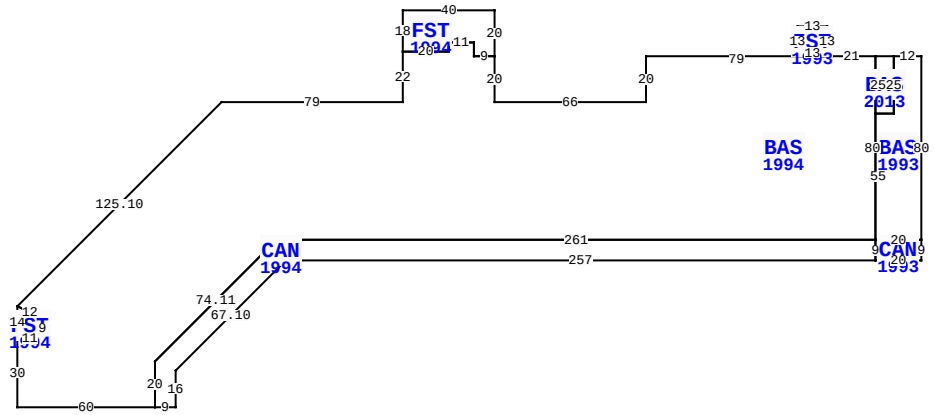

2100 SADLER SQ, FERNANDINA BEACH

BLD DATE	06/30/2021	KK	LGL DATE	
XF DATE	06/30/2021	KK	LAND DATE	06/30/2021 KK
INC DATE			AG DATE	

NASSAU COUNTY PROPERTY — VALUATION SUMMARY

VALUATION BY	DIRECT_CAP
Tax Group: 2	Tax Dist:
BUILDING MARKET VALUE	0
TOTAL MARKET OB/XF VALUE	0
TOTAL LAND VALUE - MARKET	0
TOTAL MARKET VALUE	4,827,231
SOH/AGL Deduction	0
ASSESSED VALUE	4,827,231
TOTAL EXEMPTION VALUE	0
BASE TAXABLE VALUE	4,827,231
TOTAL JUST VALUE	4,827,231
NCON VALUE	0
INCOME VALUE	4,827,231
PREVIOUS YEAR MKT VALUE	4,827,223

PERMIT NUM	DESCRIPTION	AMT	ISSUED
20130156	REPAIR/RRF	2,400	01/22/2013
20130119	OTHER	500	01/16/2013
20130034	GAS	500	01/07/2013
20130041	ELEC OTHER	1,000	01/07/2013
20121963	GAS	0	09/24/2012
20111818	SIGN	0	10/10/2011

SALES DATA

OFF RECORD Number	DATE	TYPE INST	Q U	V I	RSN CD	SALE PRICE
1548/1576	1/31/2008	WD	U	I	02	100
GRANTOR: SOUTHEASTERN PROPERTY						
GRANTEE: PROPERTY MANAGEMENT						
1548/1576	1/31/2008	WD	U	I	02	100
GRANTOR: SOUTHEASTERN PROPERTY						
GRANTEE: PROPERTY MANAGEMENT						

BUILDING NOTES

BUILDING DIMENSIONS

BAS=[YR=1993] W12 BAS=[YR=2013] W8 BAS=[YR=1994]
W21FST=[YR=1993] N13W13S13 E13$W79S20W66N20FST=[YR=1994]
N20W40 S18E20N4E11S6E9$W9N6W11S4W20 S22W79 L89 D89
FST=[YR=1994] S14E11N9 U5 L11 $ R11 D5 S9W11S30E60
CAN=[YR=1994] E9N16 R48 U48 E257N9 CAN=[YR=1993]
S9E20N9W20$W261 D53 L53 S20$N20 R53 U53 E261N80$S25E8
N25$S25W8S55E20N80$.

EXTRA FEATURES

LN	OB/XF CODE	DESCRIPTION	BLD	CAP	L	W	UNITS	UT	Adj R	ADJ UNIT PRICE	ORIG COND	YEAR ON	YEAR ACTUAL	Q	% COND	OB/XF MKT VALUE	NOTES
40	0803	ASPHALT C	0	0	0	0	10,880.00	SF	2.00	2.00	100	2007	2007	3	62	13,491	
41	0400	CONC CURB	0	0	0	0	1,225.00	LF	15.00	15.00	100	2007	2007	3	92	16,905	
42	0855	CONC PAVER	0	0	0	0	371.00	SF	10.00	10.00	100	2007	2007	3	89	3,302	
43	0810	CONCRETE A	0	0	0	0	117.00	SF	6.50	6.50	100	2007	2007	3	89	677	
44	1123	CB 8"	0	0	27	0	1,225.00	SF	6.15	6.15	100	2007	2007	3	89	6,705	
45	0972	ST LGHT UN	0	0	0	0	2.00	UT	2,530.00	2,530.00	100	2007	2007	3	74	3,744	
46	0975	ST LT/ARM	0	0	0	0	2.00	UT	500.00	500.00	100	2007	2007	3	74	740	
47	0097	AWNING CN	0	0	0	0	120.00	SF	65.00	65.00	100	2007	2007	3	52	4,056	
48	0803	ASPHALT C	0	0	0	0	6,534.00	SF	2.00	2.00	100	2007	2007	3	62	8,102	
49	0803	ASPHALT C	0	0	0	0	2,430.00	SF	2.00	2.00	100	2007	2007	3	62	3,013	

TOTAL OB/XF 60,735

LAND DESCRIPTION

LN	USE CODE	CLS	LAND USE DESCRIPTION	CAP	RD	LOC ZONE	FRONT	DEPTH	TOT LND UTS	UNIT TYPE	DT	DPTH FACT	% COND	TOT ADJ	UNIT PRICE	ADJ UNIT PRICE	LAND VALUE	OTHER ADJUSTMENTS AND NOTES	YEAR	DENSITY	DECL	FRZ	YR	CONSRV

REVIEW DATE 06/30/2021 BY KK Total Acres: 0.00 Total Land Value: 0 Market: 0 Agricultural: 0 Common: 0 PRINTED 08/02/2023 BY SYS

PT OF GOV'T LOT 5
OR 1548/1576
FOOD LION LEASED PROPERTY

SADLER SQUARE LAND TRUST/PROPERTY MANAGEMENT SUPPO
1 SLEIMAN PARKWAY STE #270
JACKSONVILLE, FL 32216

2023

29-3N-28-0000-0004-0080

NASSAU COUNTY PROPERTY

BUILDING CHARACTERISTICS

ELEMENT	CD	CONSTRUCTION
Exterior Wall	17	CB STUCCO 70
Exterior Wall	28	GLASS THRM 30
Roof Structur	09	RIDGE FRME 100
Roof Cover	04	BUILT-UP 100
Interior Wall	05	DRYWALL 100
Interior Floo	03	CONC FINSH 100
Ceiling	04	NONE 100
Air Condition	04	ROOF TOP 100
Heating Type	04	AIR DUCTED 100
Fixtures		8 100
Frame	03	MASONRY 100
Story Height		14 100
RMS		4 100
Stories	1.	1. 100
Units		0 100
Occupancy	00	NONE 100
Quality	03	Quality Level 03
DOR CODE	1600	COMMUNITY SHOPPING
MAP NUM		MKT AREA 01
NEIGHBORHOOD/LOC	2004.00	

AREA TYPE	TOTAL GROSS AREA	PCT OF BASE	TOT ADJ AREA	SUBAREA MARKET VALUE
BAS	14,342	100	14,342	1,755,996
UST	32	40	13	1,591
TOTALS	14,374		14,355	1,757,587

MARKET ADJUSTMENTS

TYPE	MDL	EFF. AREA	TOT ADJ PTS	EFF. BASE RATE	REPL. COST NEW	AYB	EYB	ECON	FNCT		NORM	% COND
1101	04	14,355	93.9057	137.57	1,974,817	2007	2007	0	0	0	11.00	89.00

20 RETAILSTOR – 0% - 0 Heated Area: 14342 HX Base Yr

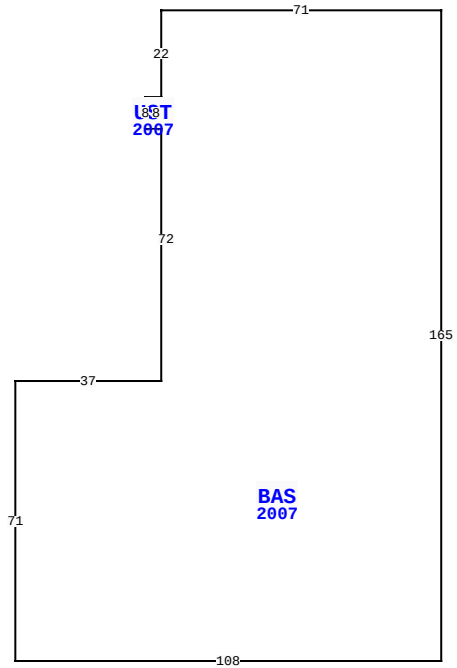

BLD DATE	06/30/2021 KK	LGL DATE	
XF DATE	06/30/2021 KK	LAND DATE	06/30/2021 KK
INC DATE		AG DATE	

2100 SADLER SQ, FERNANDINA BEACH

VALUATION SUMMARY

VALUATION BY	DIRECT_CAP
Tax Group: 2	Tax Dist:
BUILDING MARKET VALUE	0
TOTAL MARKET OB/XF VALUE	0
TOTAL LAND VALUE - MARKET	0
TOTAL MARKET VALUE	4,827,231
SOH/AGL Deduction	0
ASSESSED VALUE	4,827,231
TOTAL EXEMPTION VALUE	0
BASE TAXABLE VALUE	4,827,231
TOTAL JUST VALUE	4,827,231
NCON VALUE	0
INCOME VALUE	4,827,231
PREVIOUS YEAR MKT VALUE	4,827,223

PERMIT NUM	DESCRIPTION	AMT	ISSUED
20111842	FIRE SUPP SYS	2,000	10/10/2011
20111798	SIGN	0	10/07/2011
20111668	SIGN	0	09/22/2011
20111339	H/AC	2,000	08/10/2011
20111340	ELEC OTHER	300	08/10/2011
20110745	SIGN	1,600	05/16/2011

SALES DATA

OFF RECORD Number	DATE	TYPE INST	Q / U	V / I	RSN CD	SALE PRICE
1548/1576	1/31/2008	WD	U	I	02	100

GRANTOR: SOUTHEASTERN PROPERTY
GRANTEE: PROPERTY MANAGEMENT

1548/1576	1/31/2008	WD	U	I	02	100

GRANTOR: SOUTHEASTERN PROPERTY
GRANTEE: PROPERTY MANAGEMENT

BUILDING NOTES

BUILDING DIMENSIONS

BAS=[YR=2007] W71 S22 UST=[YR=2007] W4 S8 E4 N8$ S72 W37 S71 E108 N165$.

EXTRA FEATURES

LN	OB/XF CODE	DESCRIPTION	BLD	CAP	L	W	UNITS	UT	Adj R	ADJ UNIT PRICE	ORIG COND	YEAR ON	YEAR ACTUAL	Q	% COND	OB/XF MKT VALUE	NOTES
50	0803	ASPHALT C	0	0	0	0	5,367.00	SF	2.00	2.00	100	2007	2007	3	62	6,655	
51	1123	CB 8"	0	0	53	0	318.00	SF	6.15	6.15	100	2007	2007	3	89	1,741	
52	0810	CONCRETE A	0	0	32	11	352.00	SF	6.50	6.50	100	2007	2007	3	89	2,036	
53	4950	BOLLARD	0	0	0	0	12.00	UT	100.00	100.00	100	2007	2007	3	100	1,200	
54	0978	SECURTY LT	0	0	0	0	3.00	UT	225.00	225.00	100	2007	2007	3	74	500	
55	0966	FIRE SPRNK	0	0	0	0	14,342.00	SF	3.00	3.00	100	2007	2007	3	89	38,293	
57	0976	DECORATIVE	0	0	0	0	19.00	UT	125.00	125.00	100	2007	2007	3	74	1,758	
58	0418	EXHST FAN	0	0	0	0	1.00	UT	400.00	400.00	100	1987	1987	3	20	80	
59	0819	CONC 12"	0	0	0	0	226.00	SF	9.50	9.50	100	2018	2018	3	98	2,104	
60	0400	CONC CURB	0	0	0	0	45.00	LF	15.00	15.00	100	2018	2018	3	99	668	

TOTAL OB/XF 55,035

LAND DESCRIPTION

LN	USE CODE	CLS	LAND USE DESCRIPTION	CAP	RD	LOC ZONE	FRONT	DEPTH	TOT LND UTS	UNIT TYPE	DT	DPTH FACT	% COND	TOT ADJ	UNIT PRICE	ADJ UNIT PRICE	LAND VALUE	OTHER ADJUSTMENTS AND NOTES	YEAR	DENSITY	DECL	FRZ	YR	CONSRV

REVIEW DATE 06/30/2021 BY KK Total Acres: 0.00 Total Land Value: 0 Market: 0 Agricultural: 0 Common: 0 PRINTED 08/02/2023 BY SYS

PT OF GOV'T LOT 5
OR 1548/1576
FOOD LION LEASED PROPERTY

SADLER SQUARE LAND TRUST/PROPERTY MANAGEMENT SUPPO
1 SLEIMAN PARKWAY STE #270
JACKSONVILLE, FL 32216

2023

29-3N-28-0000-0004-0080

NASSAU COUNTY PROPERTY

BUILDING CHARACTERISTICS

ELEMENT	CD	CONSTRUCTION

DOR CODE	1600	COMMUNITY SHOPPING	
MAP NUM		MKT AREA	01
NEIGHBORHOOD/LOC	2004.00		

AREA TYPE	TOTAL GROSS AREA	PCT OF BASE	TOT ADJ AREA	SUBAREA MARKET VALUE
TOTALS				

MARKET ADJUSTMENTS

TYPE	MDL	EFF. AREA	TOT ADJ PTS	EFF. BASE RATE	REPL. COST NEW	AYB	EYB	ECON	FNCT		NORM	% COND

VALUATION SUMMARY

VALUATION BY	DIRECT_CAP
Tax Group: 2	Tax Dist:
BUILDING MARKET VALUE	0
TOTAL MARKET OB/XF VALUE	0
TOTAL LAND VALUE - MARKET	0
TOTAL MARKET VALUE	4,827,231
SOH/AGL Deduction	0
ASSESSED VALUE	4,827,231
TOTAL EXEMPTION VALUE	0
BASE TAXABLE VALUE	4,827,231
TOTAL JUST VALUE	4,827,231
NCON VALUE	0
INCOME VALUE	4,827,231
PREVIOUS YEAR MKT VALUE	4,827,223

PERMIT NUM	DESCRIPTION	AMT	ISSUED
20110746	ELEC OTHER	150	05/16/2011
20110686	ELEC OTHER	400	05/05/2011
20110662	REMODEL	3,800	04/29/2011
20110632	REMODEL	4,000	04/26/2011
20100912	SIGN	225	06/03/2010
20100798	ADDITION	1,000	05/13/2010

SALES DATA

OFF RECORD Number	DATE	TYPE INST	Q U /	V I /	RSN CD	SALE PRICE
1548/1576	1/31/2008	WD	U	I	02	100
GRANTOR: SOUTHEASTERN PROPERTY						
GRANTEE: PROPERTY MANAGEMENT						
1548/1576	1/31/2008	WD	U	I	02	100
GRANTOR: SOUTHEASTERN PROPERTY						
GRANTEE: PROPERTY MANAGEMENT						

BLD DATE	06/30/2021	KK	LGL DATE	
XF DATE	06/30/2021	KK	LAND DATE	06/30/2021 KK
INC DATE			AG DATE	

BUILDING NOTES

BUILDING DIMENSIONS

EXTRA FEATURES

LN	OB/XF CODE	DESCRIPTION	BLD	CAP	L	W	UNITS	UT	Adj R	ADJ UNIT PRICE	ORIG COND	YEAR ON	YEAR ACTUAL	Q	% COND	OB/XF MKT VALUE	NOTES
61	6001	ROLLUP DR	0	0	0	0	1.00	UT	400.00	400.00	100	2018	2018	3	86	344	
62	0097	AWNING CN	0	0	0	0	55.00	SF	65.00	65.00	100	2018	2018	3	90	3,218	
63	0976	DECORATIVE	0	0	0	0	5.00	UT	125.00	125.00	100	2018	2018	3	95	594	
64	0098	AWNING MTL	0	0	11	4	44.00	SF	13.00	13.00	100	1987	1987	3	20	114	
65	0098	AWNING MTL	0	0	22	4	88.00	SF	13.00	13.00	100	1987	1987	3	20	229	
66	0819	CONC 12"	0	0	11	6	66.00	SF	9.50	9.50	100	2007	2007	3	89	558	
67	0090	AUTO DOOR	0	0	0	0	2.00	UT	2,500.00	2,500.00	100	2018	2018	3	86	4,300	
68	0810	CONCRETE A	0	0	0	0	75.00	SF	6.50	6.50	100	2007	2007	3	89	434	
69	0966	FIRE SPRNK	0	0	0	0	31,746.00	SF	3.00	3.00	100	2018	2018	3	98	93,333	
70	0966	FIRE SPRNK	0	0	0	0	28,644.00	SF	3.00	3.00	100	1987	1987	3	60	51,559	

TOTAL OB/XF 154,683

LAND DESCRIPTION

LN	USE CODE	CLS	LAND USE DESCRIPTION	CAP	RD	LOC ZONE	FRONT	DEPTH	TOT LND UTS	UNIT TYPE	DT	DPTH FACT	% COND	TOT ADJ	UNIT PRICE	ADJ UNIT PRICE	LAND VALUE	OTHER ADJUSTMENTS AND NOTES	YEAR	DENSITY	DECL	FRZ	YR	CONSRV

REVIEW DATE 06/30/2021 BY KK Total Acres: 0.00 Total Land Value: 0 Market: 0 Agricultural: 0 Common: 0 PRINTED 08/02/2023 BY SYS