E1/2 OF LOT 40
IN OR 983/541
CORNWALL SURVEY

EICHHOLZ WAYNE A & CHHAI
PO BOX 1444
HILLIARD, FL 32046-1444

2023

29-3N-24-2020-0040-0010

BUILDING CHARACTERISTICS

ELEMENT	CD	CONSTRUCTION
Exterior Wall	20	FACE BRICK 100
Roof Structur	03	GABLE/HIP 100
Roof Cover	03	COMP SHNGL 100
Interior Wall	05	DRYWALL 80
Interior Wall	04	PLYWOOD 20
Interior Floo	14	CARPET 90
Interior Floo	11	CLAY TILE 10
Air Condition	03	CENTRAL 100
Heating Type	04	AIR DUCTED 100
Bedrooms		3 100
Bathrooms		4 100
Frame	02	WOOD FRAME 100
Stories	1.	1. 100
Units		0 100
BUD8 Adjustme	04	DIST 01 100
Occupancy	00	NONE 100
Quality	02	Quality Level 02
DOR CODE	0100	SINGLE FAMILY
MAP NUM		MKT AREA 09
NEIGHBORHOOD/LOC	9001.00	

AREA TYPE	TOTAL GROSS AREA	PCT OF BASE	TOT ADJ AREA	SUBAREA MARKET VALUE
BAS	4,345	100	4,345	375,444
BAS	70	100	70	6,048
BAS	240	100	240	20,738
BAS	625	100	625	54,005
FOP	90	30	27	2,333
FOP	184	30	55	4,753
FOP	1,080	30	324	27,996
PTO	320	5	16	1,383
UDU	300	55	165	14,258
TOTALS	7,254		5,867	506,958

MARKET ADJUSTMENTS

TYPE	MDL	EFF. AREA	TOT ADJ PTS	EFF. BASE RATE	REPL. COST NEW	AYB	EYB	ECON	FNCT		NORM	% COND
0900	01	5,867	95.9358	113.92	668,369	1984	1989	0	0	0	24.15	75.85

1 SNGL FAM – 100% - 2015 Heated Area: 5280 HX Base Yr 2015

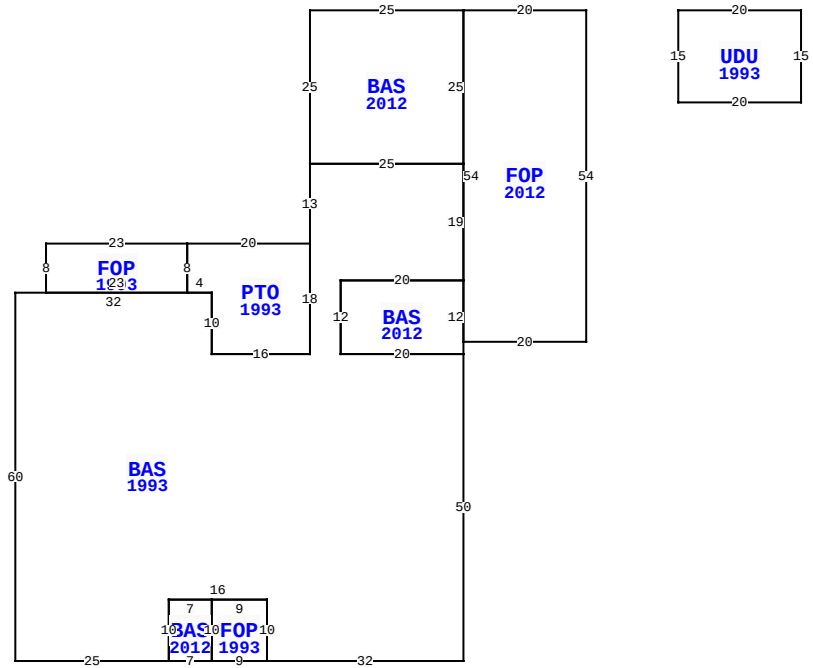

26504 SHEARED STOKES RD, HILLIARD

BLD DATE		LGL DATE	
XF DATE		LAND DATE	06/16/2023 MLU
INC DATE		AG DATE	

NASSAU COUNTY PROPERTY

PAGE 1 of 1 4

VALUATION SUMMARY

VALUATION BY		STANDARD
Tax Group: 4	Tax Dist:	
BUILDING MARKET VALUE		506,958
TOTAL MARKET OB/XF VALUE		3,590
TOTAL LAND VALUE - MARKET		95,000
TOTAL MARKET VALUE		605,548
SOH/AGL Deduction		286,666
ASSESSED VALUE		318,882
TOTAL EXEMPTION VALUE	HX HB	50,000
BASE TAXABLE VALUE		268,882
TOTAL JUST VALUE		605,548
NCON VALUE		0
INCOME VALUE		
PREVIOUS YEAR MKT VALUE		600,077

PERMIT NUM	DESCRIPTION	AMT	ISSUED

SALES DATA

OFF RECORD Number	DATE	TYPE INST	Q U	V I	RSN CD	SALE PRICE
0983/0541	4/25/2001	WD	U	I	05	126,100
GRANTOR: THE CIT GROUP/CONSUME						
GRANTEE: EICHHOLZ WAYNE & CH						
0943/1510	8/08/2000	CT	U	I	14	100
GRANTOR: CLERK OF COURT						
GRANTEE: THE CIT GROUP/CONSU						

BUILDING NOTES

BUILDING DIMENSIONS

FOP=[YR=2012] W20 BAS=[YR=2012] W25 S25 BAS=[YR=1993] S13 PTO=[YR=1993] W20 FOP=[YR=1993] W23 S8 E23N8 $ S8 E4 S10 E16 N18 $ S18 W16 N10 W32 S60 E25 BAS=[YR=2012] E7FOP=[YR=1993] E9 N10 W9 S10 $ N10 W7S10 $ N10 E16 S10 E32 N50 BAS=[YR=2012] W20 N12 E20 S12 $ W20 N12 E20 N19 W25 $ E25 N25 $ S54 E20 N54$ PTR= E15 UDU=[YR=1993] E20 S15 W20 N15 $ W15 $.

EXTRA FEATURES

LN	OB/XF CODE	DESCRIPTION	BLD	CAP	L	W	UNITS	UT	Adj R	ADJ UNIT PRICE	ORIG COND	YEAR ON	YEAR ACTUAL	Q	% COND	OB/XF MKT VALUE	NOTES
1	0752	USP	0	100	20	26	520.00	SF	15.00	15.00	100	1984	1984	3	20	1,560	
2	0500	FP-PRE FAB	0	100	0	0	1.00	UT	3,500.00	3,500.00	100	1984	1984	3	58	2,030	

LAND DESCRIPTION

TOTAL OB/XF 3,590

LN	USE CODE	CLS	LAND USE DESCRIPTION	CAP	RD	LOC ZONE	FRONT	DEPTH	TOT LND UTS	UNIT TYPE	DT	DPTH FACT	% COND	TOT ADJ	UNIT PRICE	ADJ UNIT PRICE	LAND VALUE	OTHER ADJUSTMENTS AND NOTES	YEAR	DENSITY	DECL	FRZ	YR	CONSRV
1	000115	C	SFR ACRES	100	0007	OR	0.00	0.00	5.00	AC		1.00	1.00	1.00	19,000.00	19,000.00	95,000							

REVIEW DATE 07/21/2021 BY TWA Total Acres: 5.00 Total Land Value: 95,000 Market: 0 Agricultural: 0 Common: 95,000 PRINTED 08/02/2023 BY SYS