PT OF LOTS 22 23 & 24
IN OR 2442/471
CORNWALL SURVEY

DEBERRY JARON M & TRACIE S
26240 CIRCLE T LN
HILLIARD, FL 32046

2023

29-3N-24-2020-0022-0010

BUILDING CHARACTERISTICS

ELEMENT	CD	CONSTRUCTION
Exterior Wall	31	HARDIE BRD 90
Exterior Wall	20	FACE BRICK 10
Roof Structur	03	GABLE/HIP 100
Roof Cover	03	COMP SHNGL 100
Interior Wall	05	DRYWALL 100
Interior Floo	13	LVT/LAMNT 100
Air Condition	03	CENTRAL 100
Heating Type	04	AIR DUCTED 100
Bedrooms		4 100
Bathrooms		3.5 100
Frame	02	WOOD FRAME 100
Stories	1.5	1.5 100
Units		0 100
Occupancy	00	NONE 100
Quality	02	Quality Level 02
DOR CODE	0100	SINGLE FAMILY
MAP NUM		MKT AREA 09
NEIGHBORHOOD/LOC	9001.00	

AREA TYPE	TOTAL GROSS AREA	PCT OF BASE	TOT ADJ AREA	SUBAREA MARKET VALUE
BAS	2,950	100	2,950	329,456
FGR	550	55	302	33,727
FOP	248	30	74	8,264
FOP	510	30	153	17,087
FUS	332	100	332	37,078
STR	56	10	6	670
TOTALS	4,646		3,817	426,283

MARKET ADJUSTMENTS

TYPE	MDL	EFF. AREA	TOT ADJ PTS	EFF. BASE RATE	REPL. COST NEW	AYB	EYB	ECON	FNCT		NORM	% COND
0900	01	3,817	94.0500	111.68	426,283	2022	2022	0	0	0	0.00	100.00

1 SNGL FAM – 100% - 2023 Heated Area: 3282 HX Base Yr 2023

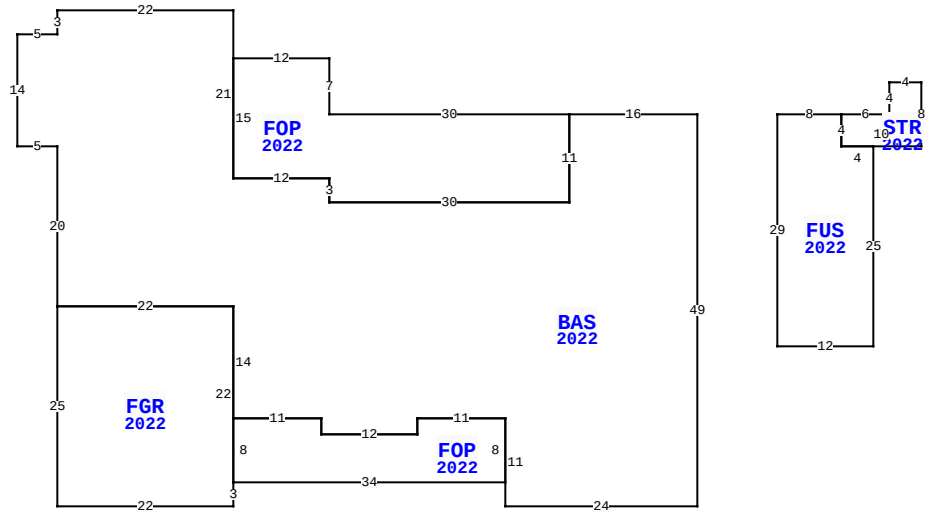

26240 CIRCLE T LN, HILLIARD

BLD DATE		LGL DATE	
XF DATE		LAND DATE	06/16/2023 MLU
INC DATE		AG DATE	

NASSAU COUNTY PROPERTY

VALUATION SUMMARY

VALUATION BY		STANDARD
Tax Group: 4	Tax Dist:	
BUILDING MARKET VALUE		426,283
TOTAL MARKET OB/XF VALUE		6,690
TOTAL LAND VALUE - MARKET		134,500
TOTAL MARKET VALUE		567,473
SOH/AGL Deduction		0
ASSESSED VALUE		567,473
TOTAL EXEMPTION VALUE	HX HB	50,000
BASE TAXABLE VALUE		517,473
TOTAL JUST VALUE		567,473
NCON VALUE		432,973
INCOME VALUE		
PREVIOUS YEAR MKT VALUE		70,600

PERMIT NUM	DESCRIPTION	AMT	ISSUED
22018778	CO ISSUED	0	12/22/2022
21016723	NEW CONSTR	543,052	12/02/2021

SALES DATA

OFF RECORD Number	DATE	TYPE INST	Q U /	V I /	RSN CD	SALE PRICE
2442/0471	3/12/2021	QC	U	V	11	100

GRANTOR: DEBERRY FARMS LLC

GRANTEE: DEBERRY JARON M & T

BUILDING NOTES

BUILDING DIMENSIONS

BAS=[YR=2022] W16 FOP=[YR=2022] W30 N7 W12 S15 E12 S3 E30 N11$ S11 W30 N3 W12 N21 W22 S3 W5 S14 E5 S20 FGR=[YR=2022] S25 E22 N3 FOP=[YR=2022] E34 N8 W11 S2 W12 N2 W11 S8$ N22 W22$ E22 S14 E11 S2 E12 N2 E11 S11 E24 N49$ PTR=E10 FUS=[YR=2022] E8 STR=[YR=2022] E6 N4 E4 S8 W10 N4$ S4 E4 S25 W12 N29$ W10$.

EXTRA FEATURES

LN	OB/XF CODE	DESCRIPTION	BLD	CAP	L	W	UNITS	UT	Adj R	ADJ UNIT PRICE	ORIG COND	YEAR ON	YEAR ACTUAL	Q	% COND	OB/XF MKT VALUE	NOTES
1	0811	CONCRETE B	0	100	0	0	902.00	SF	5.20	5.20	100	2022	2022	3	100	4,690	
2	0504	FP-ELECTRI	0	100	0	0	1.00	UT	2,000.00	2,000.00	100	2022	2022	3	100	2,000	

LAND DESCRIPTION

TOTAL OB/XF 6,690

LN	USE CODE	CLS	LAND USE DESCRIPTION	CAP	RD	LOC ZONE	FRONT	DEPTH	TOT LND UTS	UNIT TYPE	DT	DPTH FACT	% COND	TOT ADJ	UNIT PRICE	ADJ UNIT PRICE	LAND VALUE	OTHER ADJUSTMENTS AND NOTES	YEAR	DENSITY	DECL	FRZ	YR	CONSRV
1	000115	C	SFR ACRES	100		OR	0.00	0.00	7.00	AC		1.00	1.00	1.00	19,000.00	19,000.00	133,000							
2	009630	C	SWAMP	0		OR	0.00	0.00	3.00	AC		1.00	1.00	1.00	500.00	500.00	1,500							

REVIEW DATE 01/03/2023 BY WW Total Acres: 10.00 Total Land Value: 134,500 Market: 0 Agricultural: 0 Common: 134,500 PRINTED 08/02/2023 BY SYS