SUB LOT 8
IN OR 2485/85
PT OF GOVT LOT 2 UNR

LOTT CASEY D/ZOLA ERIK L
PO BOX 15248
FERNANDINA BEACH, FL 32034

2023

29-2N-28-4950-0008-0000

BUILDING CHARACTERISTICS

ELEMENT	CD	CONSTRUCTION
Exterior Wall	31	HARDIE BRD 100
Roof Structur	03	GABLE/HIP 100
Roof Cover	03	COMP SHNGL 100
Interior Wall	05	DRYWALL 100
Interior Floo	13	LVT/LAMNT 100
Air Condition	03	CENTRAL 100
Heating Type	04	AIR DUCTED 100
Bedrooms		3 100
Bathrooms		4 100
Frame	02	WOOD FRAME 100
Stories	2.	2. 100
Units		0 100
Occupancy	00	NONE 100
Quality	03	Quality Level 03

DOR CODE 0100 SINGLE FAMILY
MAP NUM | MKT AREA 04
NEIGHBORHOOD/LOC 4005.00

AREA TYPE	TOTAL GROSS AREA	PCT OF BASE	TOT ADJ AREA	SUBAREA MARKET VALUE
BAS	2,264	100	2,264	279,491
FGR	589	55	324	39,998
FOP	192	30	58	7,160
FOP	459	30	138	17,036
FST	36	55	20	2,469
FUS	260	100	260	32,097
STR	72	10	7	864
TOTALS	3,872		3,071	379,115

MARKET ADJUSTMENTS

TYPE	MDL	EFF. AREA	TOT ADJ PTS	EFF. BASE RATE	REPL. COST NEW	AYB	EYB	ECON	FNCT		NORM	% COND
0900	01	3,071	103.9600	123.45	379,115	2022	2022	0	0	0	0.00	100.00

1 SNGL FAM – 0% - 0 Heated Area: 2524 HX Base Yr

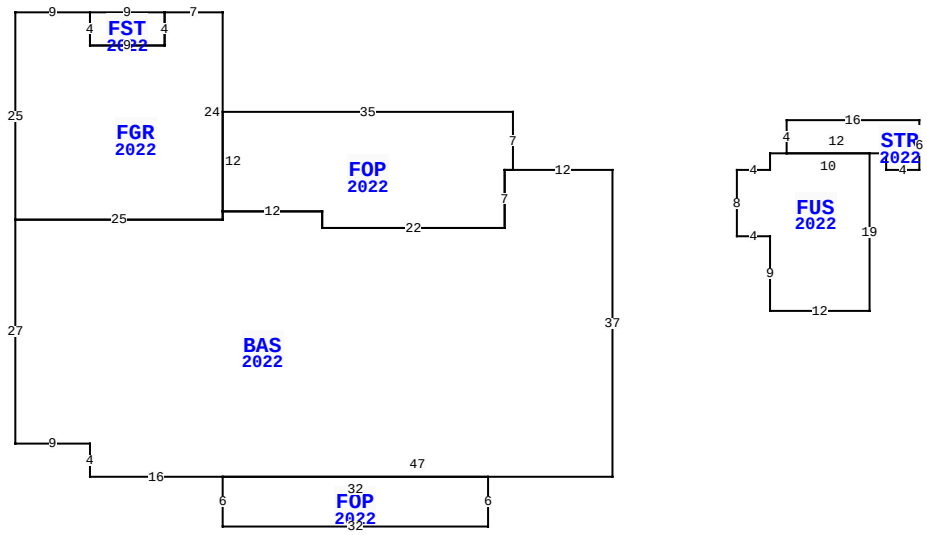

95106 MARC ANTHONY RD, FERNANDINA BEACH

BLD DATE		LGL DATE	
XF DATE		LAND DATE	05/30/2023 MLU
INC DATE		AG DATE	

NASSAU COUNTY PROPERTY

PAGE 1 of 1 4

VALUATION SUMMARY

VALUATION BY	STANDARD
Tax Group: 4	Tax Dist:
BUILDING MARKET VALUE	379,115
TOTAL MARKET OB/XF VALUE	0
TOTAL LAND VALUE - MARKET	90,750
TOTAL MARKET VALUE	469,865
SOH/AGL Deduction	24,200
ASSESSED VALUE	445,665
TOTAL EXEMPTION VALUE	0
BASE TAXABLE VALUE	445,665
TOTAL JUST VALUE	469,865
NCON VALUE	379,115
INCOME VALUE	
PREVIOUS YEAR MKT VALUE	68,000

PERMIT NUM	DESCRIPTION	AMT	ISSUED
22001729	CO ISSUED	0	01/17/2023
22001729	NEW CONSTR	441,109	01/31/2022
B210769	STEEL BLDG	49,228	06/11/2021
992600	MH MOVE-ON	0	03/01/1999

SALES DATA

OFF RECORD Number	DATE	TYPE INST	Q U	V I	RSN CD	SALE PRICE
2485/0085	8/04/2021	QC	U	I	11	100
GRANTOR: LOTT CASEY D						
GRANTEE: LOTT CASEY D & ERIK						
2436/0575	2/22/2021	WD	Q	V	01	70,000
GRANTOR: KALAFUS RICHARD A						
GRANTEE: LOTT CASEY D						

BUILDING NOTES

BUILDING DIMENSIONS

BAS=[YR=2022] W12 FOP=[YR=2022] N7 W35 S12 E12 S2 E22 N7 E1$ W1 S7 W22 N2 W12 FGR=[YR=2022] N24 W7 FST=[YR=2022] W9 S4 E9 N4$ S4 W9 N4 W9 S25 E25 N1$ S1 W25 S27 E9 S4 E16 FOP=[YR=2022] S6 E32 N6 W32$ E47 N37 $ PTR=E15 FUS=[YR=2022] E4N2E2 STR=[YR=2022] N4 E16 S6 W4 N2 W12$ E10 S19 W12 N9 W4 N8$ W15$.

EXTRA FEATURES

L N	OB/XF CODE	DESCRIPTION	BLD	CAP	L	W	UNITS	UT	Adj R	ADJ UNIT PRICE	ORIG COND	YEAR ON	YEAR ACTUAL	Q	% COND	OB/XF MKT VALUE	NOTES

LAND DESCRIPTION

TOTAL OB/XF 0

L N	USE CODE	CLS	LAND USE DESCRIPTION	CAP	R D	LOC ZONE	FRONT	DEPTH	TOT LND UTS	UNIT TYPE	D T	DPTH FACT	% COND	TOT ADJ	UNIT PRICE	ADJ UNIT PRICE	LAND VALUE	OTHER ADJUSTMENTS AND NOTES	YEAR	DENSITY	DECL	FRZ	YR	CONSRV
1	000100	C	SFR	0		OR	0.00	0.00	1.21	AC		1.00	1.00	1.00	75,000.00	75,000.00	90,750							

REVIEW DATE 02/13/2023 BY DJ Total Acres: 1.21 Total Land Value: 90,750 Market: 0 Agricultural: 0 Common: 90,750 PRINTED 08/02/2023 BY SYS