LOT 50
SANDY POINTE PRESERVE PHASE 2
OR 2401/128

MANSFIELD DANIEL & SARAH
95224 SANDY POINTE DRIVE
FERNANDINA BEACH, FL 32034

2023

29-2N-28-0117-0050-0000

NASSAU COUNTY PROPERTY

BUILDING CHARACTERISTICS

ELEMENT	CD	CONSTRUCTION
Exterior Wall	31	HARDIE BRD 100
Roof Structur	08	IRREGULAR 100
Roof Cover	03	COMP SHNGL 100
Interior Wall	05	DRYWALL 100
Interior Floo	13	LVT/LAMNT 100
Air Condition	03	CENTRAL 100
Heating Type	04	AIR DUCTED 100
Bedrooms		4 100
Bathrooms		3 100
Frame	02	WOOD FRAME 100
Stories	1.	1. 100
Units		0 100
Occupancy	00	NONE 100
Quality	02	Quality Level 02

DOR CODE	0100	SINGLE FAMILY	
MAP NUM		MKT AREA	04
NEIGHBORHOOD/LOC	4087.00		

AREA TYPE	TOTAL GROSS AREA	PCT OF BASE	TOT ADJ AREA	SUBAREA MARKET VALUE
BAS	2,488	100	2,488	298,137
FGR	725	55	399	47,812
FOP	71	30	21	2,516
FOP	220	30	66	7,909
FST	15	55	8	959
TOTALS	3,519		2,982	357,333

MARKET ADJUSTMENTS

TYPE	MDL	EFF. AREA	TOT ADJ PTS	EFF. BASE RATE	REPL. COST NEW	AYB	EYB	ECON	FNCT		NORM	% COND
0900	01	2,982	100.9090	119.83	357,333	2022	2022	0	0	0	0.00	100.00

1 SNGL FAM – 0% - 0 Heated Area: 2488 HX Base Yr

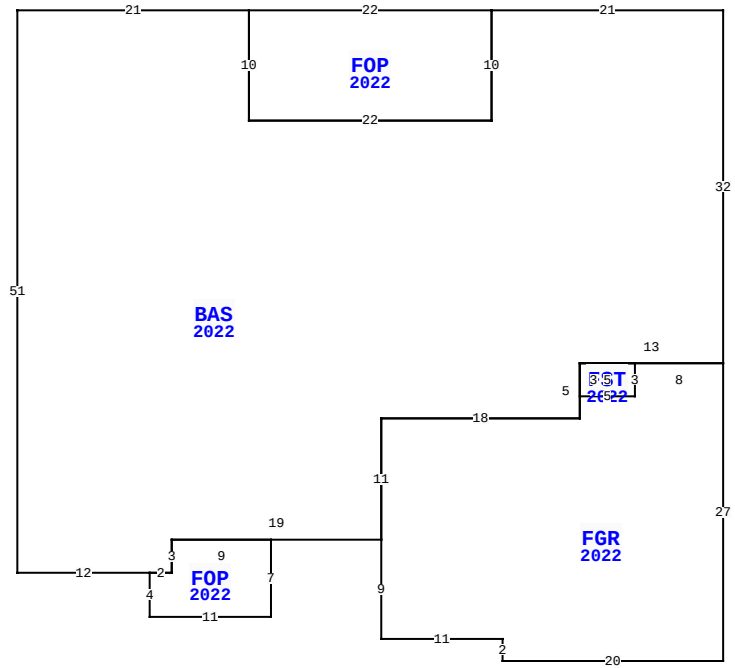

BLD DATE		LGL DATE	
XF DATE		LAND DATE	
INC DATE		AG DATE	

95224 SANDY POINTE DR, FERNANDINA BEACH

VALUATION SUMMARY

VALUATION BY	STANDARD
Tax Group: 4	Tax Dist:
BUILDING MARKET VALUE	357,333
TOTAL MARKET OB/XF VALUE	9,180
TOTAL LAND VALUE - MARKET	75,000
TOTAL MARKET VALUE	441,513
SOH/AGL Deduction	20,550
ASSESSED VALUE	420,963
TOTAL EXEMPTION VALUE	0
BASE TAXABLE VALUE	420,963
TOTAL JUST VALUE	441,513
NCON VALUE	366,513
INCOME VALUE	
PREVIOUS YEAR MKT VALUE	75,000

PERMIT NUM	DESCRIPTION	AMT	ISSUED
22018628	CO ISSUED	0	12/20/2022
B2206164	NEW CONSTR	421,488	04/20/2022

SALES DATA

OFF RECORD Number	DATE	TYPE INST	Q U	V I	RSN CD	SALE PRICE
2612/1054	1/06/2023	WD	Q	I	02	627,500

GRANTOR: SEDA CONSTRUCTION COM
GRANTEE: MANSFIELD DANIEL &

BUILDING NOTES

BUILDING DIMENSIONS

BAS=[YR=2022] W21 FOP=[YR=2022] W22 S10 E22 N10$ S10 W22 N10 W21 S51 E12 FOP=[YR=2022] S4 E11 N7 W9 S3 W2 $ E2 N3 E19 FGR=[YR=2022] S9 E11 S2 E20 N27 W8 FST=[YR=2022] S3 W5 N3 E5 $ W5 S5 W18 S11$ N11 E18 N5 E13 N32$.

EXTRA FEATURES

LN	OB/XF CODE	DESCRIPTION	BLD	CAP	L	W	UNITS	UT	Adj R	ADJ UNIT PRICE	ORIG COND	YEAR ON	YEAR ACTUAL	Q	% COND	OB/XF MKT VALUE	NOTES
1	0855	CONC PAVER	0	0	0	0	849.00	SF	10.00	10.00	100	2022	2022	3	100	8,490	
2	0855	CONC PAVER	0	0	0	0	69.00	SF	10.00	10.00	100	2022	2022	3	100	690	

LAND DESCRIPTION

TOTAL OB/XF 9,180

LN	USE CODE	CLS	LAND USE DESCRIPTION	CAP	RD	LOC ZONE	FRONT	DEPTH	TOT LND UTS	UNIT TYPE	DT	DPTH FACT	% COND	TOT ADJ	UNIT PRICE	ADJ UNIT PRICE	LAND VALUE	OTHER ADJUSTMENTS AND NOTES	YEAR	DENSITY	DECL	FRZ	YR	CONSRV
1	000100	C	SFR	0			0.00	0.00	1.00	LT		1.00	1.00	1.00	75,000.00	75,000.00	75,000							

REVIEW DATE 12/13/2022 BY DJ Total Acres: 0.00 Total Land Value: 75,000 Market: 0 Agricultural: 0 Common: 75,000 PRINTED 08/02/2023 BY SYS