LOT 68
IN OR 2074/255
HARBOR CONCOURSE PHASE 1

PUGH LARRY D JR & STEPHANIE
97332 HARBOR CONCOURSE CIRCLE
FERNANDINA BEACH, FL 32034

2023

29-2N-28-0115-0068-0000

BUILDING CHARACTERISTICS

ELEMENT	CD	CONSTRUCTION
Exterior Wall	31	HARDIE BRD 100
Roof Structur	03	GABLE/HIP 100
Roof Cover	03	COMP SHNGL 100
Interior Wall	05	DRYWALL 100
Interior Floo	11	CLAY TILE 70
Interior Floo	14	CARPET 30
Air Condition	03	CENTRAL 100
Heating Type	04	AIR DUCTED 100
Bedrooms		4 100
Bathrooms		3 100
Frame	02	WOOD FRAME 100
Stories	1.5	1.5 100
Units		0 100
Occupancy	00	NONE 100
Quality	04	Quality Level 04
DOR CODE	0100	SINGLE FAMILY
MAP NUM		MKT AREA 04
NEIGHBORHOOD/LOC	4145.00	

AREA TYPE	TOTAL GROSS AREA	PCT OF BASE	TOT ADJ AREA	SUBAREA MARKET VALUE
BAS	1,888	100	1,888	199,451
FGR	441	55	243	25,671
FOP	48	30	14	1,479
FSP	224	40	90	9,508
FUS	376	100	376	39,722
STR	60	10	6	634
TOTALS	3,037		2,617	276,463

MARKET ADJUSTMENTS

TYPE	MDL	EFF. AREA	TOT ADJ PTS	EFF. BASE RATE	REPL. COST NEW	AYB	EYB	ECON	FNCT		NORM	% COND
0100	01	2,617	120.0528	108.35	283,552	2016	2016	0	0	0	2.50	97.50

1 SINGLE FAM – 100% - 2017 Heated Area: 2264 HX Base Yr 2017

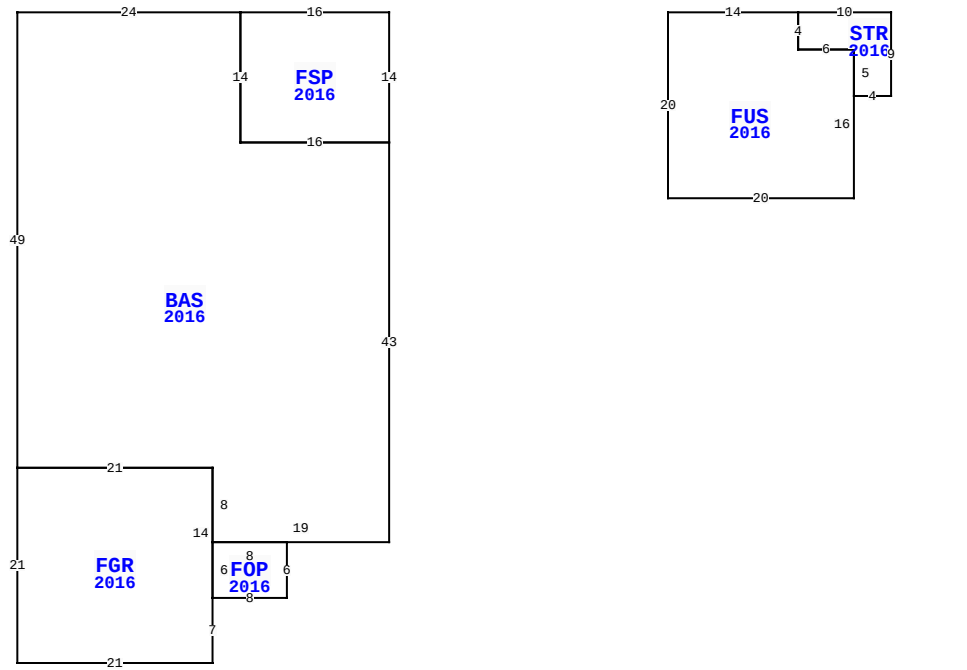

97332 HARBOR CONCOURSE CIR, FERNANDINA BEACH

BLD DATE	03/30/2023	NW	LGL DATE
XF DATE			LAND DATE
INC DATE			AG DATE

NASSAU COUNTY PROPERTY

PAGE 1 of 1 4

VALUATION SUMMARY

VALUATION BY		STANDARD
Tax Group: 4	Tax Dist:	
BUILDING MARKET VALUE		276,463
TOTAL MARKET OB/XF VALUE		3,087
TOTAL LAND VALUE - MARKET		75,000
TOTAL MARKET VALUE		354,550
SOH/AGL Deduction		130,589
ASSESSED VALUE		223,961
TOTAL EXEMPTION VALUE	HX HB	50,000
BASE TAXABLE VALUE		173,961
TOTAL JUST VALUE		354,550
NCON VALUE		0
INCOME VALUE		
PREVIOUS YEAR MKT VALUE		317,197

PERMIT NUM	DESCRIPTION	AMT	ISSUED
B1631979	NEW CONSTR	283,274	03/01/2016

SALES DATA

OFF RECORD Number	DATE	TYPE INST	Q U	V I	RSN CD	SALE PRICE
2074/0255	9/23/2016	WD	Q	I	01	253,000
GRANTOR: DREAM FINDERS HOMES L						
GRANTEE: PUGH LARRY D JR & S						
2038/0349	4/01/2016	WD	Q	V	05	400,000
GRANTOR: NASSAU CONCOURSE LLC						
GRANTEE: DREAM FINDERS HOMES						

BUILDING NOTES

BUILDING DIMENSIONS

FSP=[YR=2016] W16 BAS=[YR=2016] W24 S49 FGR=[YR=2016] S21 E21 N7 FOP=[YR=2016] E8 N6 W8 S6 $ N14 W21 $ E21 S8 E19 N43 W16 N14 $ S14 E16 N14 $ PTR= E30 FUS=[YR=2016] E14 STR=[YR=2016] E10 S9 W4 N5 W6 N4 $ S4 E6 S16 W20 N20 $ W30 $.

EXTRA FEATURES

LN	OB/XF CODE	DESCRIPTION	BLD	CAP	L	W	UNITS	UT	Adj R	ADJ UNIT PRICE	ORIG COND	YEAR ON	YEAR ACTUAL	Q	% COND	OB/XF MKT VALUE	NOTES
1	0811	CONCRETE B	0	100	0	0	612.00	SF	5.20	5.20	100	2016	2016	3	97	3,087	

LAND DESCRIPTION

TOTAL OB/XF 3,087

LN	USE CODE	CLS	LAND USE DESCRIPTION	CAP	RD	LOC ZONE	FRONT	DEPTH	TOT LND UTS	UNIT TYPE	DT	DPTH FACT	% COND	TOT ADJ	UNIT PRICE	ADJ UNIT PRICE	LAND VALUE	OTHER ADJUSTMENTS AND NOTES	YEAR	DENSITY	DECL	FRZ	YR	CONSRV
1	000100	C	SFR	100			0.00	0.00	1.00	LT		1.00	1.00	1.00	75,000.00	75,000.00	75,000							

REVIEW DATE 01/18/2023 BY DJA Total Acres: 0.00 Total Land Value: 75,000 Market: 0 Agricultural: 0 Common: 75,000 PRINTED 08/02/2023 BY SYS