BLOCK 3 LOT 2
(EX S'LY 79.97 FT & S-1 & S-2)
IN OR 2174/1624

HAMZA ABRAHAM J & JENNIFER B
45107 BOOTH ST
CALLAHAN, FL 32011

2023

29-2N-25-3220-0003-0020

NASSAU COUNTY PROPERTY

BUILDING CHARACTERISTICS

ELEMENT	CD	CONSTRUCTION
Exterior Wall	31	HARDIE BRD 100
Roof Structur	03	GABLE/HIP 100
Roof Cover	03	COMP SHNGL 100
Interior Wall	05	DRYWALL 100
Interior Floo	13	LVT/LAMNT 70
Interior Floo	14	CARPET 30
Air Condition	03	CENTRAL 100
Heating Type	04	AIR DUCTED 100
Bedrooms		3 100
Bathrooms		2.5 100
Frame	02	WOOD FRAME 100
Stories	2.	2. 100
Units		0 100
Occupancy	00	NONE 100
Quality	03	Quality Level 03
DOR CODE	0100	SINGLE FAMILY
MAP NUM		MKT AREA 07
NEIGHBORHOOD/LOC	7001.00	

AREA TYPE	TOTAL GROSS AREA	PCT OF BASE	TOT ADJ AREA	SUBAREA MARKET VALUE
BAL	128	15	19	2,283
BAS	1,452	100	1,452	174,525
FGR	506	55	278	33,414
FOP	110	30	33	3,966
FOP	128	30	38	4,568
FUS	704	100	704	84,618
TOTALS	3,028		2,524	303,376

MARKET ADJUSTMENTS

TYPE	MDL	EFF. AREA	TOT ADJ PTS	EFF. BASE RATE	REPL. COST NEW	AYB	EYB	ECON	FNCT		NORM	% COND
0900	01	2,524	105.9840	125.86	317,671	2007	2012	0	0	0	4.50	95.50

7 SNGL FAM – 0% - 0 Heated Area: 2156 HX Base Yr

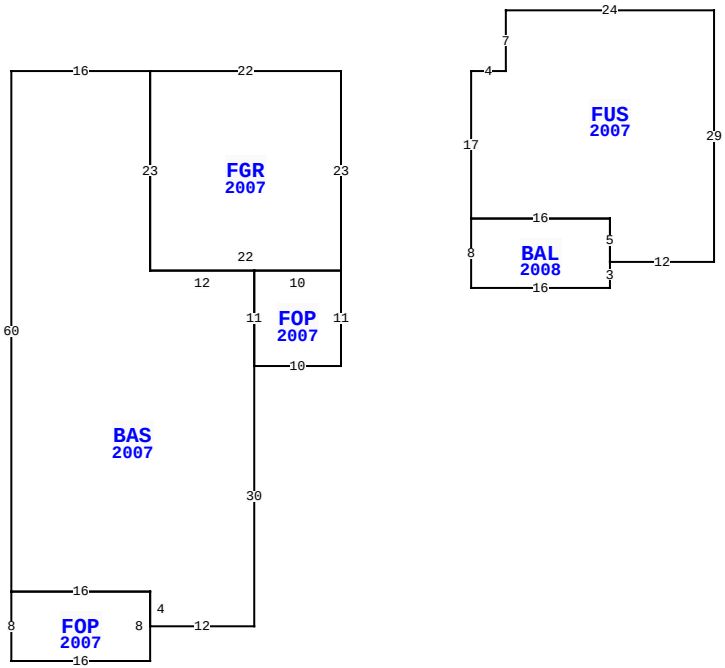

45107 BOOTH ST, CALLAHAN

BLD DATE	09/22/2010 KJ	LGL DATE	
XF DATE		LAND DATE	06/02/2023 MLU
INC DATE		AG DATE	

NASSAU COUNTY PROPERTY — VALUATION SUMMARY

VALUATION BY	STANDARD
Tax Group: 1	Tax Dist:
BUILDING MARKET VALUE	303,376
TOTAL MARKET OB/XF VALUE	9,893
TOTAL LAND VALUE - MARKET	35,000
TOTAL MARKET VALUE	348,269
SOH/AGL Deduction	94,893
ASSESSED VALUE	253,376
TOTAL EXEMPTION VALUE	0
BASE TAXABLE VALUE	253,376
TOTAL JUST VALUE	348,269
NCON VALUE	0
INCOME VALUE	
PREVIOUS YEAR MKT VALUE	264,626

PERMIT NUM	DESCRIPTION	AMT	ISSUED
4390	REPAIR/RRF	0	03/15/2021
B3021	NEW CONSTR	60,000	03/01/2007
B3012	NEW CONSTR	136,715	02/05/2007
C2923	CO ISSUED	136,715	06/28/2006
B2923	NEW CONSTR	136,715	06/28/2006
C2889	CO ISSUED	136,715	03/09/2006

SALES DATA

OFF RECORD Number	DATE	TYPE INST	Q U	V I	RSN CD	SALE PRICE
2174/1624	1/31/2018	WD	U	I	37	180,000
GRANTOR: HOLLOWAY CECIL R JR &						
GRANTEE: HAMZA ABRAHAM J & J						
1689/0886	6/23/2010	WD	U	I	30	100
GRANTOR: HOLLOWAY CECIL R & LE						
GRANTEE: HOLLOWAY CECIL R JR						

BUILDING NOTES

BUILDING DIMENSIONS

FGR=[YR=2007] W22 BAS=[YR=2007] W16 S60 FOP=[YR=2007] S8 E16 N8 W16$ E16 S4 E12 N30 FOP=[YR=2007] E10 N11 W10 S11$ N11 W12 N23$ S23 E22 N23$ PTR=E15 FUS=[YR=2007] E4 N7 E24 S29 W12 BAL=[YR=2008] S3 W16 N8 E16 S5$ N5 W16 N17$ W15$.

EXTRA FEATURES

LN	OB/XF CODE	DESCRIPTION	BLD	CAP	L	W	UNITS	UT	Adj R	ADJ UNIT PRICE	ORIG COND	YEAR ON	YEAR ACTUAL	Q	% COND	OB/XF MKT VALUE	NOTES
1	0812	CONCRETE C	0	0	0	0	2,779.00	SF	4.00	4.00	100	2007	2007	3	89	9,893	

LAND DESCRIPTION

TOTAL OB/XF 9,893

LN	USE CODE	CLS	LAND USE DESCRIPTION	CAP	RD	LOC ZONE	FRONT	DEPTH	TOT LND UTS	UNIT TYPE	DT	DPTH FACT	% COND	TOT ADJ	UNIT PRICE	ADJ UNIT PRICE	LAND VALUE	OTHER ADJUSTMENTS AND NOTES	YEAR	DENSITY	DECL	FRZ	YR	CONSRV
1	000100	C	SFR	0			70.00	132.00	70.00	FF		1.00	1.00	1.00	500.00	500.00	35,000							

REVIEW DATE 01/30/2022 BY KB Total Acres: 0.00 Total Land Value: 35,000 Market: 0 Agricultural: 0 Common: 35,000 PRINTED 08/02/2023 BY SYS