BLK 1 PT OF LOT 4
IN OR 38/602
JEHU BOOTHE SURVEY PBK 1/29

FACHKO RAYMOND D EST
C/O PATRICIA FACHKO, PO BOX 43
CALLAHAN, FL 32011-0043

2023

29-2N-25-3120-0007-0000

NASSAU COUNTY PROPERTY

BUILDING CHARACTERISTICS

ELEMENT	CD	CONSTRUCTION
Exterior Wall	10	ABOVE AVG 70
Exterior Wall	15	CONC BLOCK 30
Roof Structur	08	IRREGULAR 100
Roof Cover	01	MINIMUM 100
Interior Wall	05	DRYWALL 100
Interior Floo	09	PINE WOOD 60
Interior Floo	14	CARPET 40
Air Condition	03	CENTRAL 100
Heating Type	04	AIR DUCTED 100
Bedrooms		3 100
Bathrooms		2 100
Frame	02	WOOD FRAME 100
Stories	2.	2. 100
Units		0 100
BUD8 Adjustme	01	DIST CA 100
Occupancy	00	NONE 100
Quality	01	Quality Level 01

DOR CODE	0100	SINGLE FAMILY	
MAP NUM		MKT AREA	07
NEIGHBORHOOD/LOC	7001.00		

AREA TYPE	TOTAL GROSS AREA	PCT OF BASE	TOT ADJ AREA	SUBAREA MARKET VALUE
BAS	2,096	100	2,096	155,490
BAS	357	100	357	26,484
FOP	54	30	16	1,187
FOP	100	30	30	2,226
FOP	210	30	63	4,673
FOP	25	30	8	594
FUS	668	100	668	49,555
UGR	550	45	248	18,398
UGR	1,053	45	474	35,163
TOTALS	5,113		3,960	293,769

MARKET ADJUSTMENTS

TYPE	MDL	EFF. AREA	TOT ADJ PTS	EFF. BASE RATE	REPL. COST NEW	AYB	EYB	ECON	FNCT		NORM	% COND
0900	01	3,960	80.1900	95.23	377,111	1900	1970	0	0	0	22.10	77.90

1 SNGL FAM – 100% - 0 Heated Area: 3121 HX Base Yr

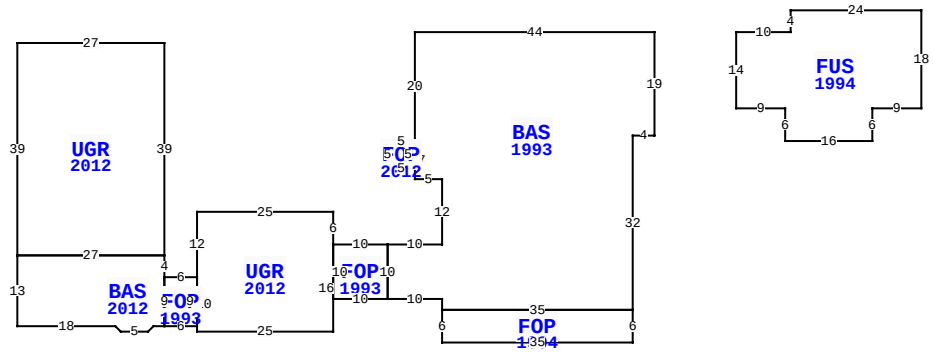

45514 BOOTH ST, CALLAHAN

BLD DATE		LGL DATE	
XF DATE		LAND DATE	06/02/2023 MLU
INC DATE		AG DATE	

VALUATION SUMMARY

VALUATION BY		STANDARD
Tax Group: 1	Tax Dist:	
BUILDING MARKET VALUE		293,769
TOTAL MARKET OB/XF VALUE		4,540
TOTAL LAND VALUE - MARKET		72,500
TOTAL MARKET VALUE		370,809
SOH/AGL Deduction		224,428
ASSESSED VALUE		146,381
TOTAL EXEMPTION VALUE	HX HB WX	55,000
BASE TAXABLE VALUE		91,381
TOTAL JUST VALUE		370,809
NCON VALUE		0
INCOME VALUE		
PREVIOUS YEAR MKT VALUE		284,099

PERMIT NUM	DESCRIPTION	AMT	ISSUED

SALES DATA

OFF RECORD Number	DATE	TYPE INST	Q U	V I	RSN CD	SALE PRICE

BUILDING NOTES

BUILDING DIMENSIONS

BAS=[YR=1993] W44 S20 FOP=[YR=2012] W5 S5 E5 N5$ S7 E5 S12 W10 FOP=[YR=1993] W10 UGR=[YR=2012] N6 W25 S12 FOP=[YR=1993] W6 BAS=[YR=2012] N4 UGR=[YR=2012] N39 W27 S39 E27$ W27 S13 E18 D1 R1 E5 U1 R1 E2 N9 $ S9 E6 N9 $ S10 E25 N16 $ S10 E10 N10 $ S10 E10 S2 FOP=[YR=1994] S6 E35 N6 W35 $ E35 N32 E4 N19 $ PTR= E15 FUS=[YR=1994] E10 N4 E24 S18 W9 S6 W16 N6 W9 N14 $ W15 $.

EXTRA FEATURES

LN	OB/XF CODE	DESCRIPTION	BLD	CAP	L	W	UNITS	UT	Adj R	ADJ UNIT PRICE	ORIG COND	YEAR ON	YEAR ACTUAL	Q	% COND	OB/XF MKT VALUE	NOTES
5	0825	BRICK	0	100	0	0	189.00	SF	12.50	12.50	100	1983	1983	3	80	1,890	
6	0476	VF 6 SBPL	0	100	0	0	120.00	LF	32.00	32.00	100	2005	2005	3	69	2,650	

LAND DESCRIPTION

TOTAL OB/XF 4,540

LN	USE CODE	CLS	LAND USE DESCRIPTION	CAP	RD	LOC ZONE	FRONT	DEPTH	TOT LND UTS	UNIT TYPE	DT	DPTH FACT	% COND	TOT ADJ	UNIT PRICE	ADJ UNIT PRICE	LAND VALUE	OTHER ADJUSTMENTS AND NOTES	YEAR	DENSITY	DECL	FRZ	YR	CONSRV
1	000100	C	SFR	100	0006		47.00	118.00	47.00	FF		1.00	1.00	1.00	500.00	500.00	23,500							
2	000100	C	SFR	100	0006		98.00	224.00	98.00	FF		1.00	1.00	1.00	500.00	500.00	49,000							

REVIEW DATE 03/29/2018 BY KBX Total Acres: 0.00 Total Land Value: 72,500 Market: 0 Agricultural: 0 Common: 72,500 PRINTED 08/02/2023 BY SYS