PT GOVT LOTS 4 & 5 OF
SEC 29-2N-25E IN OR 1197/259
(EX LIFT STA ESMT IN

THE O'STEEN COMPANY LLP
759 NORTH EDGEWOOD AVE
JACKSONVILLE, FL 32254

2023

29-2N-25-0000-0055-0010

BUILDING CHARACTERISTICS

ELEMENT	CD	CONSTRUCTION
Exterior Wall	10	ABOVE AVG 100
Roof Structur	04	WOOD TRUSS 100
Roof Cover	03	COMP SHNGL 100
Interior Wall	05	DRYWALL 100
Interior Floo	14	CARPET 70
Interior Floo	11	CLAY TILE 30
Ceiling	01	FIN.SUSPD 100
Air Condition	03	CENTRAL 100
Heating Type	04	AIR DUCTED 100
Fixtures		56 100
Frame	02	WOOD FRAME 100
Story Height		10 100
RMS		50 100
Stories	1.	1. 100
Units		0 100
BUD8 Adjustme	06	DIST 1D 100
Occupancy	00	NONE 100
Quality	03	Quality Level 03
DOR CODE	1600	COMMUNITY SHOPPING
MAP NUM		MKT AREA 07
NEIGHBORHOOD/LOC	1290.100	

AREA TYPE	TOTAL GROSS AREA	PCT OF BASE	TOT ADJ AREA	SUBAREA MARKET VALUE
BAS	2,722	100	2,722	162,184
BAS	11,220	100	11,220	668,517
BAS	1,156	100	1,156	68,878
CAN	126	30	38	2,264
CAN	1,232	30	370	22,045
CAN	240	30	72	4,290
CAN	3,622	30	1,087	64,767
TOTALS	20,318		16,665	992,944

MARKET ADJUSTMENTS

TYPE	MDL	EFF. AREA	TOT ADJ PTS	EFF. BASE RATE	REPL. COST NEW	AYB	EYB	ECON	FNCT		NORM	% COND
1602	04	16,665	102.4338	112.42	1,873,479	1975	1975	0	0	0	47.00	53.00

1 NBHD SHOP - 0% - 0 Heated Area: 15098 HX Base Yr

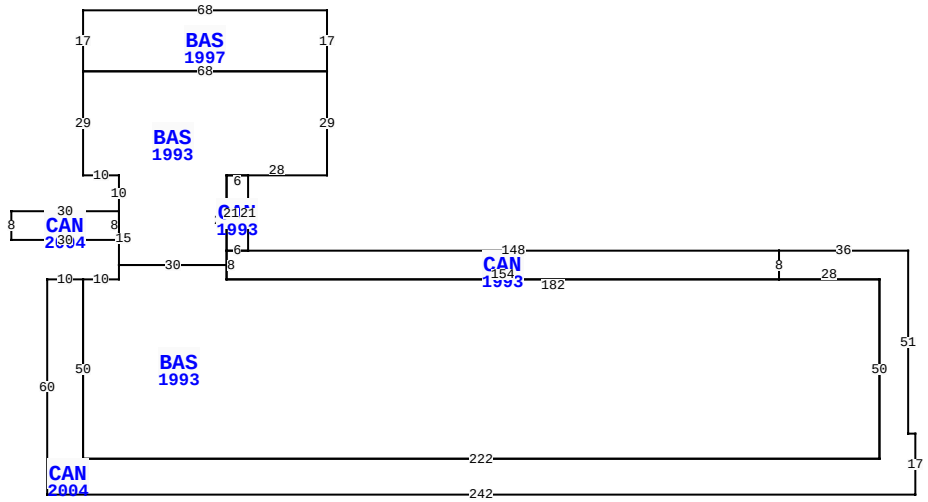

542190 US HWY 1, CALLAHAN

BLD DATE	04/27/2022	KK	LGL DATE	
XF DATE	04/27/2022	KK	LAND DATE	04/27/2022 KK
INC DATE			AG DATE	

NASSAU COUNTY PROPERTY

PAGE 1 of 2 1

VALUATION SUMMARY

VALUATION BY	STANDARD
Tax Group: 1	Tax Dist:
BUILDING MARKET VALUE	992,944
TOTAL MARKET OB/XF VALUE	41,459
TOTAL LAND VALUE - MARKET	620,240
TOTAL MARKET VALUE	1,654,643
SOH/AGL Deduction	537,777
ASSESSED VALUE	1,116,866
TOTAL EXEMPTION VALUE	0
BASE TAXABLE VALUE	1,116,866
TOTAL JUST VALUE	1,654,643
NCON VALUE	0
INCOME VALUE	1,636,405
PREVIOUS YEAR MKT VALUE	1,122,908

PERMIT NUM	DESCRIPTION	AMT	ISSUED
R4040	REPAIR/RRF	0	04/01/2016
B3884-S	SIGN	0	10/06/2014
B2656	REMODEL	139,000	01/01/2004
E2548	REMODEL	1,200	11/22/2002
B01-5	REMODEL	6,000	06/01/2001
B973810	ADDITION	42,840	03/01/1997

SALES DATA

OFF RECORD Number	DATE	TYPE INST	Q U	V I	RSN CD	SALE PRICE
1197/0259	12/22/2003	WD	U	V	19	100
GRANTOR: O'STEEN HOWARD K & GR						
GRANTEE: THE O'STEEN COMPANY						
1061/0510	6/10/2002	QC	U	I	01	111,500
GRANTOR: O'STEEN HOWARD &						
GRANTEE: O'STEEN HOWARD K ET						

BUILDING NOTES

BUILDING DIMENSIONS

BAS=[YR=1997] W68 S17 BAS=[YR=1993] S29 E10 S10
CAN=[YR=2004] W30 S8 E30 N8 $ S15 BAS=[YR=1993] S4 W10
CAN=[YR=2004] W10 S60 E242 N17 W2 N51 W36 CAN=[YR=1993]
W148 CAN=[YR=1993] N21 W6 S21 E6$ W6 S8 E154 N8$ S8 E28 S50
W222 N50$ S50 E222 N50 W182 N4 W30$ E30 N25 E28 N29 W68$ E68
N17$.

EXTRA FEATURES

LN	OB/XF CODE	DESCRIPTION	BLD	CAP	L	W	UNITS	UT	Adj R	ADJ UNIT PRICE	ORIG COND	YEAR ON	YEAR ACTUAL	Q	% COND	OB/XF MKT VALUE	NOTES
1	0803	ASPHALT C	0	0	0	0	37,315.00	SF	1.80	1.80	100	1985	1985	3	50	33,584	
2	0812	CONCRETE C	0	0	12	51	612.00	SF	4.00	4.00	100	1978	1978	3	30	734	
3	0430	CL FNC 6B	0	0	0	0	72.00	LF	9.70	9.70	100	1985	1985	3	23	161	
4	0381	COOLER	0	0	6	6	36.00	SF	82.50	82.50	100	1990	1990	3	20	594	
5	0400	CONC CURB	0	0	0	0	588.00	LF	12.00	12.00	100	1975	1975	3	38	2,681	
6	0418	EXHST FAN	0	0	0	0	1.00	UT	400.00	400.00	100	1995	1995	3	20	80	
7	0476	VF 6 SBPL	0	0	0	0	30.00	LF	32.00	32.00	100	2004	2004	3	66	634	
8	0470	VNYL GATE	0	0	0	0	1.00	UT	300.00	300.00	100	2004	2004	3	66	198	
9	0978	SECURTY LT	0	0	0	0	3.00	UT	450.00	450.00	100	2000	2000	3	55	743	
10	0971	ST LGHT OV	0	0	0	0	1.00	UT	1,555.00	1,555.00	100	2000	2000	3	55	855	

TOTAL OB/XF 40,264

LAND DESCRIPTION

LN	USE CODE	CLS	LAND USE DESCRIPTION	CAP	RD	LOC ZONE	FRONT	DEPTH	TOT LND UTS	UNIT TYPE	DT	DPTH FACT	% COND	TOT ADJ	UNIT PRICE	ADJ UNIT PRICE	LAND VALUE	OTHER ADJUSTMENTS AND NOTES	YEAR	DENSITY	DECL	FRZ	YR	CONSRV
1	001600	C	SH CTR COM	0	0004	OR	175.00	131.00	77,530.00	SF		1.00	1.00	1.00	8.00	8.00	620,240							

REVIEW DATE 04/27/2022 BY KK Total Acres: 0.00 Total Land Value: 620,240 Market: 0 Agricultural: 0 Common: 620,240 PRINTED 08/02/2023 BY SYS

PT GOVT LOTS 4 & 5 OF
SEC 29-2N-25E IN OR 1197/259
(EX LIFT STA ESMT IN

THE O'STEEN COMPANY LLP
759 NORTH EDGEWOOD AVE
JACKSONVILLE, FL 32254

2023

29-2N-25-0000-0055-0010

NASSAU COUNTY PROPERTY

BUILDING CHARACTERISTICS

ELEMENT	CD	CONSTRUCTION

DOR CODE	1600	COMMUNITY SHOPPING	
MAP NUM		MKT AREA	07
NEIGHBORHOOD/LOC	1290.100		

AREA TYPE	TOTAL GROSS AREA	PCT OF BASE	TOT ADJ AREA	SUBAREA MARKET VALUE
TOTALS				

MARKET ADJUSTMENTS

TYPE	MDL	EFF. AREA	TOT ADJ PTS	EFF. BASE RATE	REPL. COST NEW	AYB	EYB	ECON	FNCT		NORM	% COND

VALUATION SUMMARY

VALUATION BY	STANDARD
Tax Group: 1	Tax Dist:
BUILDING MARKET VALUE	992,944
TOTAL MARKET OB/XF VALUE	41,459
TOTAL LAND VALUE - MARKET	620,240
TOTAL MARKET VALUE	1,654,643
SOH/AGL Deduction	537,777
ASSESSED VALUE	1,116,866
TOTAL EXEMPTION VALUE	0
BASE TAXABLE VALUE	1,116,866
TOTAL JUST VALUE	1,654,643
NCON VALUE	0
INCOME VALUE	1,636,405
PREVIOUS YEAR MKT VALUE	1,122,908

PERMIT NUM	DESCRIPTION	AMT	ISSUED
7526	REMODEL	20,200	09/12/1991
7207	REMODEL	46,050	05/03/1991

SALES DATA

OFF RECORD Number	DATE	TYPE INST	Q / U	V / I	RSN CD	SALE PRICE
1197/0259	12/22/2003	WD	U	V	19	100
GRANTOR: O'STEEN HOWARD K & GR						
GRANTEE: THE O'STEEN COMPANY						
1061/0510	6/10/2002	QC	U	I	01	111,500
GRANTOR: O'STEEN HOWARD &						
GRANTEE: O'STEEN HOWARD K ET						

BLD DATE	04/27/2022	KK	LGL DATE	
XF DATE	04/27/2022	KK	LAND DATE	04/27/2022 KK
INC DATE			AG DATE	

BUILDING NOTES

BUILDING DIMENSIONS

EXTRA FEATURES

LN	OB/XF CODE	DESCRIPTION	BLD	CAP	L	W	UNITS	UT	Adj R	ADJ UNIT PRICE	ORIG COND	YEAR ON	YEAR ACTUAL	Q	% COND	OB/XF MKT VALUE	NOTES
11	4950	BOLLARD	0	0	0	0	4.00	UT	100.00	100.00	100	2000	2000	3	100	400	
12	1127	BRICK 8"	0	0	0	0	102.00	SF	8.25	8.25	100	1975	1975	3	67.5	568	
13	1128	BRICK 12"	0	0	0	0	24.00	SF	14.00	14.00	100	1975	1975	3	67.5	227	

LAND DESCRIPTION

TOTAL OB/XF 1,195

LN	USE CODE	CLS	LAND USE DESCRIPTION	CAP	RD	LOC ZONE	FRONT	DEPTH	TOT LND UTS	UNIT TYPE	DT	DPTH FACT	% COND	TOT ADJ	UNIT PRICE	ADJ UNIT PRICE	LAND VALUE	OTHER ADJUSTMENTS AND NOTES	YEAR	DENSITY	DECL	FRZ	YR	CONSRV

REVIEW DATE 04/27/2022 BY KK Total Acres: 0.00 Total Land Value: 620,240 Market: 0 Agricultural: 0 Common: 620,240 PRINTED 08/02/2023 BY SYS