PT GOVT LOT 2 & PT OF NW1/4 OF
SEC 29-2N-25E IN OR 2121/1817

FWI 42 LLC/
C/O FLAG WHARF INC, 197 EIGHT STREET SUITE 800
BOSTON, MA 02129

2023

29-2N-25-0000-0002-0030

NASSAU COUNTY PROPERTY

BUILDING CHARACTERISTICS

ELEMENT	CD	CONSTRUCTION
Exterior Wall	25	MOD METAL 70
Exterior Wall	20	FACE BRICK 30
Roof Structur	10	STEEL FRME 100
Roof Cover	12	MODULAR MT 100
Interior Wall	05	DRYWALL 100
Interior Floo	07	CORK/VTILE 50
Interior Floo	14	CARPET 50
Ceiling	01	FIN.SUSPD 100
Air Condition	03	CENTRAL 100
Heating Type	04	AIR DUCTED 100
Fixtures		43 100
Frame	05	STEEL 100
Story Height		13 100
RMS		14 100
Stories	1.	1. 100
Units		0 100
BUD8 Adjustme	01	DIST CA 100
Occupancy	00	NONE 100
Quality	02	Quality Level 02
DOR CODE	1600	COMMUNITY SHOPPING
MAP NUM		MKT AREA 07
NEIGHBORHOOD/LOC	7002.00	

AREA TYPE	TOTAL GROSS AREA	PCT OF BASE	TOT ADJ AREA	SUBAREA MARKET VALUE
BAS	32,321	100	32,321	1,120,828
CAN	560	30	168	5,826
CAN	4,049	30	1,215	42,134
TOTALS	36,930		33,704	1,168,787

MARKET ADJUSTMENTS

TYPE	MDL	EFF. AREA	TOT ADJ PTS	EFF. BASE RATE	REPL. COST NEW	AYB	EYB	ECON	FNCT	AP	NORM	% COND
1601	04	33,704	84.6809	99.08	3,339,392	1973	1992	0	0	15	50.00	35.00

1 COMNTYSHOP - 0% - 0 Heated Area: 32321 HX Base Yr

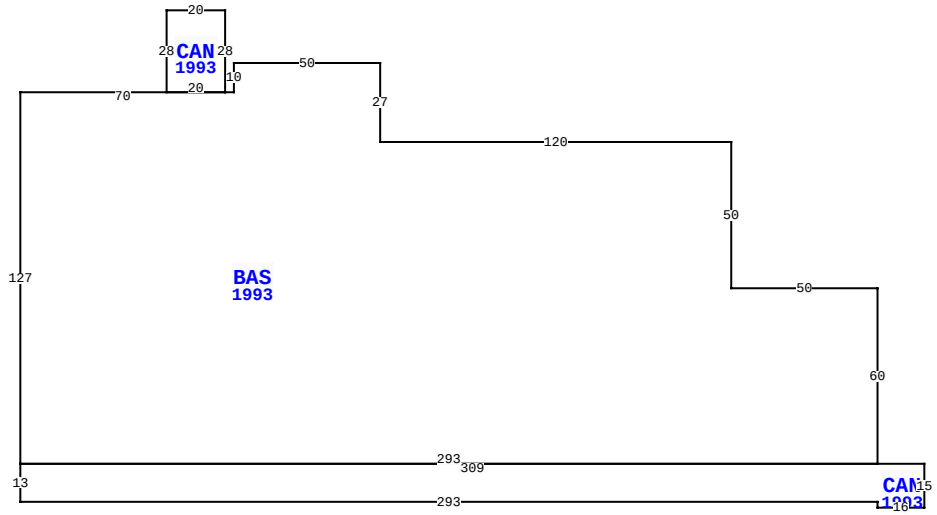

450082 SR 200, CALLAHAN

BLD DATE	02/11/2021	KK	LGL DATE	
XF DATE	02/11/2021	KK	LAND DATE	02/11/2021 KK
INC DATE			AG DATE	

VALUATION SUMMARY

VALUATION BY	DIRECT_CAP
Tax Group: 1	Tax Dist:
BUILDING MARKET VALUE	4,423,381
TOTAL MARKET OB/XF VALUE	0
TOTAL LAND VALUE - MARKET	0
TOTAL MARKET VALUE	5,529,226
SOH/AGL Deduction	387,499
ASSESSED VALUE	5,141,727
TOTAL EXEMPTION VALUE	0
BASE TAXABLE VALUE	5,141,727
TOTAL JUST VALUE	5,529,226
NCON VALUE	0
INCOME VALUE	5,529,226
PREVIOUS YEAR MKT VALUE	5,732,237

PERMIT NUM	DESCRIPTION	AMT	ISSUED
4400	REPAIR/RRF	0	04/13/2021
4216	SIGN	0	09/30/2018
B4116	REPAIR/RRF	0	05/15/2017
B4093	REMODEL	0	12/28/2016
4084	SIGN	0	11/07/2016
4083	REMODEL	0	11/03/2016

SALES DATA

OFF RECORD Number	DATE	TYPE INST	Q / U	V / I	RSN CD	SALE PRICE
2121/1817	5/18/2017	SW	Q	I	01	5,350,000
GRANTOR: CALLAHAN PLAZA VENTUR						
GRANTEE: FWI42 LLC						
1887/1397	10/31/2013	SW	Q	I	02	2,300,000
GRANTOR: CAL PLAZA HOLDINGS AS						
GRANTEE: CALLAHAN PLAZA VENT						

BUILDING NOTES

BUILDING DIMENSIONS

BAS=[YR=1993] W50 N50 W120 N27 W50 S10 W3 CAN=[YR=1993] N28 W20 S28 E20$ W70 S127 CAN=[YR=1993] S13 E293 S2 E16 N15 W309$ E293 N60 $.

EXTRA FEATURES

LN	OB/XF CODE	DESCRIPTION	BLD	CAP	L	W	UNITS	UT	Adj R	ADJ UNIT PRICE	ORIG COND	YEAR ON	YEAR ACTUAL	Q	% COND	OB/XF MKT VALUE	NOTES
1	0803	ASPHALT C	0	0	0	0	162,094.00	SF	2.00	2.00	1	1990	1990	3	1	3,242	
2	0812	CONCRETE C	0	0	0	0	1,129.00	SF	4.00	4.00	1	1983	1983	3	1	45	
3	0972	ST LGHT UN	0	0	0	0	9.00	UT	2,530.00	2,530.00	1	1983	1983	3	1	228	
5	0430	CL FNC 6B	0	0	0	0	32.00	LF	9.70	9.70	1	1983	1983	3	1	3	
6	0101	COM B-B-Q	0	0	0	0	1.00	UT	4,500.00	4,500.00	1	1992	1992	3	1	45	
7	0402	CONC BUMPE	0	0	0	0	13.00	UT	25.00	25.00	1	1993	1993	3	1	3	
9	0400	CONC CURB	0	0	0	0	396.00	LF	15.00	15.00	1	1973	1973	3	1	59	
10	0975	ST LT/ARM	0	0	0	0	17.00	UT	500.00	500.00	1	1983	1983	3	1	85	
12	0463	FENCE GATE	0	0	0	0	2.00	UT	300.00	300.00	1	1980	1980	3	1	6	
14	4950	BOLLARD	0	0	0	0	68.00	UT	100.00	100.00	1	1980	1980	3	1	68	

TOTAL OB/XF 3,784

LAND DESCRIPTION

LN	USE CODE	CLS	LAND USE DESCRIPTION	CAP	RD	LOC ZONE	FRONT	DEPTH	TOT LND UTS	UNIT TYPE	DT	DPTH FACT	% COND	TOT ADJ	UNIT PRICE	ADJ UNIT PRICE	LAND VALUE	OTHER ADJUSTMENTS AND NOTES	YEAR	DENSITY	DECL	FRZ	YR	CONSRV
1	001600	C	SH CTR COM	0	0004		0.00	0.00	396,052.00	SF		1.00	1.00	0.55	8.00	4.40	1,742,629							

REVIEW DATE 02/11/2021 BY KK Total Acres: 0.00 Total Land Value: 1,105,845 Market: 0 Agricultural: 0 Common: 0 PRINTED 08/02/2023 BY SYS

PT GOVT LOT 2 & PT OF NW1/4 OF
SEC 29-2N-25E IN OR 2121/1817

FWI 42 LLC/
C/O FLAG WHARF INC, 197 EIGHT STREET SUITE 800
BOSTON, MA 02129

2023

29-2N-25-0000-0002-0030

NASSAU COUNTY PROPERTY

BUILDING CHARACTERISTICS

ELEMENT	CD	CONSTRUCTION
Exterior Wall	25	MOD METAL 70
Exterior Wall	20	FACE BRICK 30
Roof Structur	10	STEEL FRME 100
Roof Cover	12	MODULAR MT 100
Interior Wall	05	DRYWALL 100
Interior Floo	14	CARPET 60
Interior Floo	11	CLAY TILE 40
Ceiling	01	FIN.SUSPD 100
Air Condition	03	CENTRAL 100
Heating Type	04	AIR DUCTED 100
Fixtures		49 100
Frame	05	STEEL 100
Story Height		12 100
RMS		19 100
Stories	1.	1. 100
Units		0 100
BUD8 Adjustme	01	DIST CA 100
Occupancy	00	NONE 100
Quality	02	Quality Level 02
DOR CODE	1600	COMMUNITY SHOPPING
MAP NUM		MKT AREA 07
NEIGHBORHOOD/LOC	7002.00	

AREA TYPE	TOTAL GROSS AREA	PCT OF BASE	TOT ADJ AREA	SUBAREA MARKET VALUE
BAS	11,784	100	11,784	472,863
CAN	400	30	120	4,815
CAN	1,200	30	360	14,446
USP	420	40	168	6,741
TOTALS	13,804		12,432	498,865

MARKET ADJUSTMENTS

TYPE	MDL	EFF. AREA	TOT ADJ PTS	EFF. BASE RATE	REPL. COST NEW	AYB	EYB	ECON	FNCT	AP	NORM	% COND
1601	04	12,432	97.9902	114.65	1,425,329	1986	1992	0	0	15	50.00	35.00

2 COMNTYSHOP - 0% - 0 Heated Area: 11784 HX Base Yr

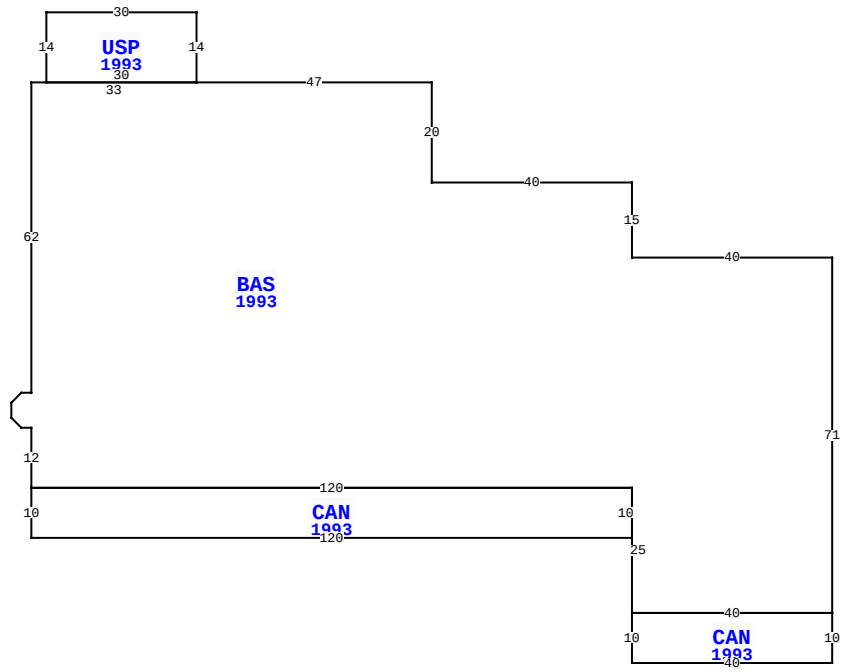

450082 SR 200, CALLAHAN

BLD DATE	02/11/2021	KK	LGL DATE	
XF DATE	02/11/2021	KK	LAND DATE	02/11/2021 KK
INC DATE			AG DATE	

NASSAU COUNTY PROPERTY

VALUATION SUMMARY

VALUATION BY	DIRECT_CAP
Tax Group: 1	Tax Dist:
BUILDING MARKET VALUE	4,423,381
TOTAL MARKET OB/XF VALUE	0
TOTAL LAND VALUE - MARKET	0
TOTAL MARKET VALUE	5,529,226
SOH/AGL Deduction	387,499
ASSESSED VALUE	5,141,727
TOTAL EXEMPTION VALUE	0
BASE TAXABLE VALUE	5,141,727
TOTAL JUST VALUE	5,529,226
NCON VALUE	0
INCOME VALUE	5,529,226
PREVIOUS YEAR MKT VALUE	5,732,237

PERMIT NUM	DESCRIPTION	AMT	ISSUED
4080	SIGN	0	10/01/2016
4080	REMODEL	0	10/01/2016
3978-E	FACILITY AUTOMATI	0	10/30/2015
B2584	SIGN	2,350	08/01/2002
B2511	REMODEL	25,000	06/02/2002
2410	SIGNS	7,510	11/01/2001

SALES DATA

OFF RECORD Number	DATE	TYPE INST	Q / U	V / I	RSN CD	SALE PRICE
2121/1817	5/18/2017	SW	Q	I	01	5,350,000
GRANTOR: CALLAHAN PLAZA VENTUR						
GRANTEE: FWI42 LLC						
1887/1397	10/31/2013	SW	Q	I	02	2,300,000
GRANTOR: CAL PLAZA HOLDINGS AS						
GRANTEE: CALLAHAN PLAZA VENT						

BUILDING NOTES

BUILDING DIMENSIONS

BAS=[YR=1993] W40 N15 W40 N20 W47 USP=[YR=1993] N14 W30 S14 E30$ W33 S62 W2 D2 L2 S3 D2 R2 E2 S12 CAN=[YR=1993] S10 E120 N10 W120 $ E120 S25 CAN=[YR=1993] S10 E40 N10 W40$ E40 N71$.

EXTRA FEATURES

LN	OB/XF CODE	DESCRIPTION	BLD	CAP	L	W	UNITS	UT	Adj R	ADJ UNIT PRICE	ORIG COND	YEAR ON	YEAR ACTUAL	Q	% COND	OB/XF MKT VALUE	NOTES
15	6001	ROLLUP DR	0	0	0	0	1.00	UT	400.00	400.00	1	2001	2001	3	1	4	
16	0424	CL FNC 6'	0	0	0	0	18.00	LF	20.00	20.00	1	1983	1983	3	1	4	
17	0803	ASPHALT C	0	0	0	0	66,623.00	SF	2.00	2.00	1	1990	1990	3	1	1,332	
18	0812	CONCRETE C	0	0	0	0	19,136.00	SF	4.00	4.00	1	1983	1983	3	1	765	
20	0966	FIRE SPRNK	0	0	0	0	41,288.00	SF	3.00	3.00	1	1992	1992	3	1	1,239	
22	0463	FENCE GATE	0	0	0	0	1.00	UT	300.00	300.00	1	1983	1983	3	1	3	
23	0402	CONC BUMPE	0	0	0	0	24.00	UT	25.00	25.00	1	1994	1994	3	1	6	
24	0400	CONC CURB	0	0	0	0	560.00	LF	15.00	15.00	1	1994	1994	3	1	84	
25	4950	BOLLARD	0	0	0	0	48.00	UT	100.00	100.00	1	1994	1994	3	1	48	
26	6001	ROLLUP DR	0	0	0	0	1.00	UT	400.00	400.00	1	2011	2011	3	1	4	

TOTAL OB/XF 3,489

LAND DESCRIPTION

LN	USE CODE	CLS	LAND USE DESCRIPTION	CAP	RD	LOC ZONE	FRONT	DEPTH	TOT LND UTS	UNIT TYPE	DT	DPTH FACT	% COND	TOT ADJ	UNIT PRICE	ADJ UNIT PRICE	LAND VALUE	OTHER ADJUSTMENTS AND NOTES	YEAR	DENSITY	DECL	FRZ	YR	CONSRV

REVIEW DATE 02/11/2021 BY KK Total Acres: 0.00 Total Land Value: 1,105,845 Market: 0 Agricultural: 0 Common: 0 PRINTED 08/02/2023 BY SYS

PT GOVT LOT 2 & PT OF NW1/4 OF
SEC 29-2N-25E IN OR 2121/1817

FWI 42 LLC/
C/O FLAG WHARF INC, 197 EIGHT STREET SUITE 800
BOSTON, MA 02129

2023

29-2N-25-0000-0002-0030

NASSAU COUNTY PROPERTY

BUILDING CHARACTERISTICS

ELEMENT	CD	CONSTRUCTION
Exterior Wall	25	MOD METAL 80
Exterior Wall	20	FACE BRICK 20
Roof Structur	10	STEEL FRME 100
Roof Cover	12	MODULAR MT 100
Interior Wall	05	DRYWALL 100
Interior Floo	07	CORK/VTILE 100
Ceiling	01	FIN.SUSPD 100
Air Condition	04	ROOF TOP 100
Heating Type	04	AIR DUCTED 100
Fixtures		7 100
Frame	05	STEEL 100
Story Height		17 100
RMS		5 100
Stories	1.	1. 100
Units		0 100
BUD8 Adjustme	01	DIST CA 100
Occupancy	00	NONE 100
Quality	02	Quality Level 02
DOR CODE	1600	COMMUNITY SHOPPING
MAP NUM		MKT AREA 07
NEIGHBORHOOD/LOC	7002.00	

AREA TYPE	TOTAL GROSS AREA	PCT OF BASE	TOT ADJ AREA	SUBAREA MARKET VALUE
BAS	9,108	100	9,108	344,538
FOP	660	30	198	7,490
TOTALS	9,768		9,306	352,027

MARKET ADJUSTMENTS

TYPE	MDL	EFF. AREA	TOT ADJ PTS	EFF. BASE RATE	REPL. COST NEW	AYB	EYB	ECON	FNCT	AP	NORM	% COND
1601	04	9,306	92.3735	108.08	1,005,792	1983	1992	0	0	15	50.00	35.00

3 COMNTYSHOP – 0% - 0 Heated Area: 9108 HX Base Yr

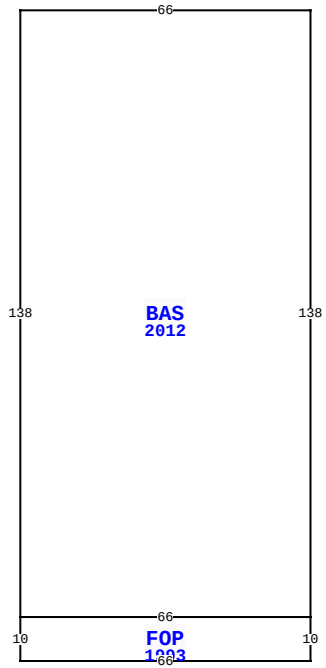

450082 SR 200, CALLAHAN

BLD DATE	02/11/2021	KK	LGL DATE	
XF DATE	02/11/2021	KK	LAND DATE	02/11/2021 KK
INC DATE			AG DATE	

VALUATION SUMMARY

VALUATION BY	DIRECT_CAP
Tax Group: 1	Tax Dist:
BUILDING MARKET VALUE	4,423,381
TOTAL MARKET OB/XF VALUE	0
TOTAL LAND VALUE - MARKET	0
TOTAL MARKET VALUE	5,529,226
SOH/AGL Deduction	387,499
ASSESSED VALUE	5,141,727
TOTAL EXEMPTION VALUE	0
BASE TAXABLE VALUE	5,141,727
TOTAL JUST VALUE	5,529,226
NCON VALUE	0
INCOME VALUE	5,529,226
PREVIOUS YEAR MKT VALUE	5,732,237

PERMIT NUM	DESCRIPTION	AMT	ISSUED
2397	ADDITION	20,000	10/01/2001
2400	REMODEL	11,000	10/01/2001
B012359	REMODEL	40,000	04/18/2001
2294	ADDITION	4,500	09/15/2000
64	REPAIR/RRF	40,000	07/07/1994
2386	REMODEL	14,000	07/16/1990

SALES DATA

OFF RECORD Number	DATE	TYPE INST	Q / U	V / I	RSN CD	SALE PRICE
2121/1817	5/18/2017	SW	Q	I	01	5,350,000
GRANTOR: CALLAHAN PLAZA VENTUR						
GRANTEE: FWI42 LLC						
1887/1397	10/31/2013	SW	Q	I	02	2,300,000
GRANTOR: CAL PLAZA HOLDINGS AS						
GRANTEE: CALLAHAN PLAZA VENT						

BUILDING NOTES

BUILDING DIMENSIONS

BAS=[YR=2012] W66 S138 FOP=[YR=1993] S10 E66 N10 W66$ E66 N138$.

EXTRA FEATURES

LN	OB/XF CODE	DESCRIPTION	BLD	CAP	L	W	UNITS	UT	Adj R	ADJ UNIT PRICE	ORIG COND	YEAR ON	YEAR ACTUAL	Q	% COND	OB/XF MKT VALUE	NOTES
27	0966	FIRE SPRNK	0	0	0	0	9,108.00	SF	3.00	3.00	1	1992	1992	3	1	273	
28	0810	CONCRETE A	0	0	20	22	440.00	SF	6.50	6.50	1	1997	1997	3	1	29	
29	0090	AUTO DOOR	0	0	0	0	2.00	UT	2,500.00	2,500.00	1	1992	1992	3	1	50	
30	0418	EXHST FAN	0	0	0	0	1.00	UT	400.00	400.00	1	1992	1992	3	1	4	
31	0418	EXHST FAN	0	0	0	0	3.00	UT	400.00	400.00	1	1992	1992	3	1	12	
32	0966	FIRE SPRNK	0	0	0	0	32,321.00	SF	3.00	3.00	1	1992	1992	3	1	970	
33	0966	FIRE SPRNK	0	0	0	0	11,784.00	SF	3.00	3.00	1	1992	1992	3	1	354	

LAND DESCRIPTION

TOTAL OB/XF 1,692

LN	USE CODE	CLS	LAND USE DESCRIPTION	CAP	RD	LOC ZONE	FRONT	DEPTH	TOT LND UTS	UNIT TYPE	DT	DPTH FACT	% COND	TOT ADJ	UNIT PRICE	ADJ UNIT PRICE	LAND VALUE	OTHER ADJUSTMENTS AND NOTES	YEAR	DENSITY	DECL	FRZ	YR	CONSRV

REVIEW DATE 02/11/2021 BY KK Total Acres: 0.00 Total Land Value: 1,105,845 Market: 0 Agricultural: 0 Common: 0 PRINTED 08/02/2023 BY SYS

PT GOVT LOT 2 & PT OF NW1/4 OF
SEC 29-2N-25E IN OR 2121/1817

FWI 42 LLC/
C/O FLAG WHARF INC, 197 EIGHT STREET SUITE 800
BOSTON, MA 02129

2023

29-2N-25-0000-0002-0030

BUILDING CHARACTERISTICS

ELEMENT	CD	CONSTRUCTION
Exterior Wall	25	MOD METAL 70
Exterior Wall	20	FACE BRICK 30
Roof Structur	10	STEEL FRME 100
Roof Cover	12	MODULAR MT 100
Interior Wall	05	DRYWALL 100
Interior Floo	07	CORK/VTILE 100
Ceiling	01	FIN.SUSPD 100
Air Condition	04	ROOF TOP 100
Heating Type	04	AIR DUCTED 100
Fixtures		30 100
Frame	05	STEEL 100
Story Height		21 100
RMS		7 100
Stories	1.	1. 100
Units		0 100
BUD8 Adjustme	01	DIST CA 100
Occupancy	00	NONE 100
Quality	02	Quality Level 02
DOR CODE	1600	COMMUNITY SHOPPING
MAP NUM		MKT AREA 07
NEIGHBORHOOD/LOC	7002.00	

AREA TYPE	TOTAL GROSS AREA	PCT OF BASE	TOT ADJ AREA	SUBAREA MARKET VALUE
AOF	396	100	396	17,372
BAS	34,058	100	34,058	1,494,091
CAN	864	30	259	11,362
CAN	1,397	30	419	18,381
FST	275	50	138	6,054
FST	802	50	401	17,591
FUS	924	100	924	40,535
SFB	6,306	80	5,045	221,319
UST	715	40	286	12,546
TOTALS	45,737		41,926	1,839,252

MARKET ADJUSTMENTS

TYPE	MDL	EFF. AREA	TOT ADJ PTS	EFF. BASE RATE	REPL. COST NEW	AYB	EYB	ECON	FNCT	AP	NORM	% COND
1401	04	41,926	97.3512	125.34	5,255,005	1975	1992	0	0	15	50.00	35.00

4 SUPER MRKT - 0% - 0 Heated Area: 40423 HX Base Yr

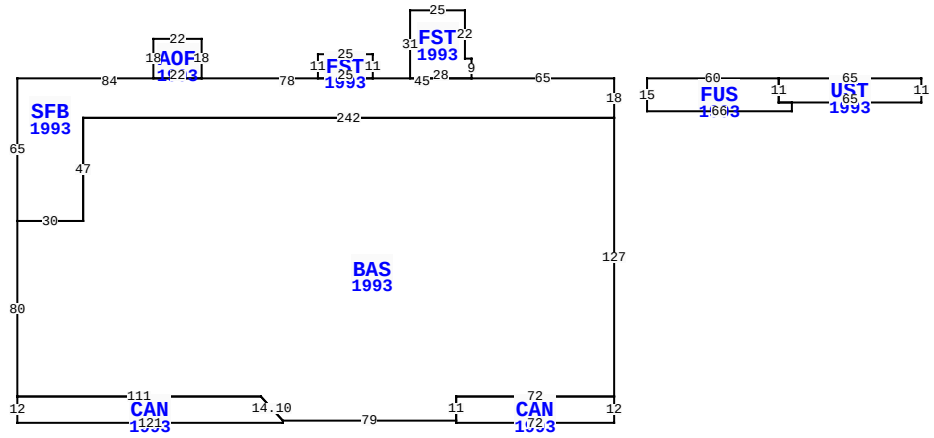

450082 SR 200, CALLAHAN

BLD DATE	02/11/2021	KK	LGL DATE	
XF DATE	02/11/2021	KK	LAND DATE	02/11/2021 KK
INC DATE			AG DATE	

NASSAU COUNTY PROPERTY

PAGE 4 of 4 1

VALUATION SUMMARY

VALUATION BY	DIRECT_CAP
Tax Group: 1	Tax Dist:
BUILDING MARKET VALUE	4,423,381
TOTAL MARKET OB/XF VALUE	0
TOTAL LAND VALUE - MARKET	0
TOTAL MARKET VALUE	5,529,226
SOH/AGL Deduction	387,499
ASSESSED VALUE	5,141,727
TOTAL EXEMPTION VALUE	0
BASE TAXABLE VALUE	5,141,727
TOTAL JUST VALUE	5,529,226
NCON VALUE	0
INCOME VALUE	5,529,226
PREVIOUS YEAR MKT VALUE	5,732,237

PERMIT NUM	DESCRIPTION	AMT	ISSUED

SALES DATA

OFF RECORD Number	DATE	TYPE INST	Q / U	V / I	RSN CD	SALE PRICE
2121/1817	5/18/2017	SW	Q	I	01	5,350,000
GRANTOR: CALLAHAN PLAZA VENTUR						
GRANTEE: FWI42 LLC						
1887/1397	10/31/2013	SW	Q	I	02	2,300,000
GRANTOR: CAL PLAZA HOLDINGS AS						
GRANTEE: CALLAHAN PLAZA VENT						

BUILDING NOTES

BUILDING DIMENSIONS

SFB=[YR=1993] W65 FST=[YR=1993] N9 W3 N22 W25 S31 E28$ W45 FST=[YR=1993] N11 W25 S11 E25$ W78 AOF=[YR=1993] N18 W22 S18 E22$ W84 S65 BAS=[YR=1993] S80 CAN=[YR=1993] S12 E121 N1 U11 L10 W111$ E111 D11 R10 E79 CAN=[YR=1993] S1 E72 N12 W72 S11$ N11 E72 N127 W242 S47 W30$ E30 N47 E242 N18$ PTR= E15 FUS=[YR=1993] E60 UST=[YR=1993] E65 S11 W65 N11$ S11 E6 S4 W66 N15 $ W15$.

EXTRA FEATURES

L N	OB/XF CODE	DESCRIPTION	BLD	CAP	L	W	UNITS	UT	Adj R	ADJ UNIT PRICE	ORIG COND	YEAR ON	YEAR ACTUAL	Q	% COND	OB/XF MKT VALUE	NOTES

LAND DESCRIPTION

TOTAL OB/XF 0

L N	USE CODE	CLS	LAND USE DESCRIPTION	CAP	R D	LOC ZONE	FRONT	DEPTH	TOT LND UTS	UNIT TYPE	D T	DPTH FACT	% COND	TOT ADJ	UNIT PRICE	ADJ UNIT PRICE	LAND VALUE	OTHER ADJUSTMENTS AND NOTES	YEAR	DENSITY	DECL	FRZ	YR	CONSRV

REVIEW DATE 02/11/2021 BY KK Total Acres: 0.00 Total Land Value: 1,105,845 Market: 0 Agricultural: 0 Common: 0 PRINTED 08/02/2023 BY SYS