PT SEC 28-1N-24E OR 2071/635
EX OR 1958/1881 & OR 2008/685

SMITH PARKER W & KALEY W
8236 BROOKS RD
BRYCEVILLE, FL 32209

2023

28-1N-24-0000-0001-0050

NASSAU COUNTY PROPERTY

BUILDING CHARACTERISTICS

ELEMENT	CD	CONSTRUCTION
Exterior Wall	20	FACE BRICK 100
Roof Structur	03	GABLE/HIP 100
Roof Cover	03	COMP SHNGL 100
Interior Wall	05	DRYWALL 100
Interior Floo	14	CARPET 80
Interior Floo	08	SHT VINYL 20
Air Condition	03	CENTRAL 100
Heating Type	04	AIR DUCTED 100
Bedrooms		3 100
Bathrooms		2 100
Frame	02	WOOD FRAME 100
Stories	1.	1. 100
Units		0 100
BUD8 Adjustme	06	DIST 1D 100
Occupancy	00	NONE 100
Quality	03	Quality Level 03

DOR CODE	0100	SINGLE FAMILY	
MAP NUM		MKT AREA	08
NEIGHBORHOOD/LOC	8001.00		

AREA TYPE	TOTAL GROSS AREA	PCT OF BASE	TOT ADJ AREA	SUBAREA MARKET VALUE
BAS	1,664	100	1,664	120,703
BAS	372	100	372	26,984
FGR	345	55	190	13,782
FGR	775	55	426	30,901
PTO	273	5	14	1,016
TOTALS	3,429		2,666	193,385

MARKET ADJUSTMENTS

TYPE	MDL	EFF. AREA	TOT ADJ PTS	EFF. BASE RATE	REPL. COST NEW	AYB	EYB	ECON	FNCT		NORM	% COND
0100	01	2,666	102.7200	92.70	247,138	1988	1993	0	0	0	21.75	78.25

1 SINGLE FAM – 100% - 2017 Heated Area: 2036 HX Base Yr 2017

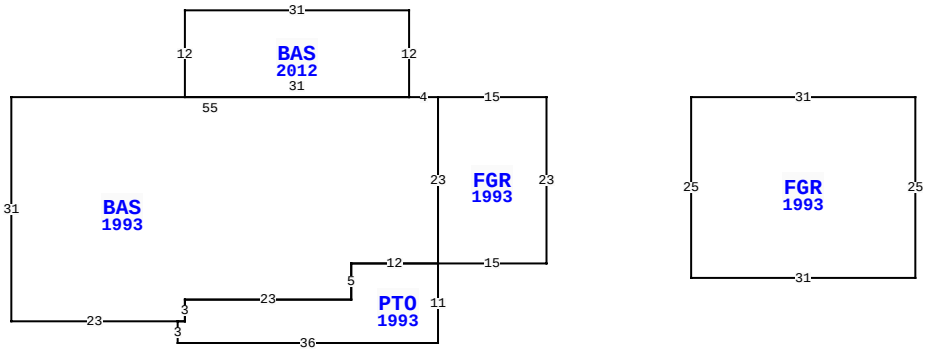

8236 BROOKS RD, BRYCEVILLE

BLD DATE		LGL DATE	
XF DATE		LAND DATE	05/22/2023 MLU
INC DATE		AG DATE	

VALUATION SUMMARY

VALUATION BY		STANDARD
Tax Group: 6	Tax Dist:	
BUILDING MARKET VALUE		193,385
TOTAL MARKET OB/XF VALUE		9,581
TOTAL LAND VALUE - MARKET		263,060
TOTAL MARKET VALUE		466,026
SOH/AGL Deduction		232,848
ASSESSED VALUE		233,178
TOTAL EXEMPTION VALUE	HX HB	50,000
BASE TAXABLE VALUE		183,178
TOTAL JUST VALUE		466,026
NCON VALUE		0
INCOME VALUE		
PREVIOUS YEAR MKT VALUE		298,597

PERMIT NUM	DESCRIPTION	AMT	ISSUED
R13068	RE-ROOF	9,235	08/01/2012
3181	H/AC	3,000	10/24/1989

SALES DATA

OFF RECORD Number	DATE	TYPE INST	Q U	V I	RSN CD	SALE PRICE
2071/0635	9/12/2016	WD	Q	I	01	195,000
GRANTOR: BARSTOW JEANINE Q ET						
GRANTEE: SMITH PARKER W & KA						
1898/1001	1/17/2014	QC	U	I	11	100
GRANTOR: CRANE THEODORE T & JO						
GRANTEE: BARSTOW JEANINE Q T						

BUILDING NOTES

BUILDING DIMENSIONS

FGR=[YR=1993] W15 BAS=[YR=1993] W4 BAS=[YR=2012] N12 W31 S12 E31$ W55 S31 E23 PTO=[YR=1993] S3 E36 N11 W12 S5 W23 S3 W1$ E1 N3 E23 N5 E12 N23$ S23 E15 N23$PTR=E20 FGR=[YR=1993] E31 S25 W31 N25$ W20$.

EXTRA FEATURES

LN	OB/XF CODE	DESCRIPTION	BLD	CAP	L	W	UNITS	UT	Adj R	ADJ UNIT PRICE	ORIG COND	YEAR ON	YEAR ACTUAL	Q	% COND	OB/XF MKT VALUE	NOTES
2	0500	FP-PRE FAB	0	100	0	0	1.00	UT	3,500.00	3,500.00	100	1988	1988	3	66	2,310	
4	0350	CARPORT WD	0	100	30	24	720.00	SF	5.20	5.20	100	2014	2014	3	70	2,621	
5	0300	BOAT DCK W	0	100	0	0	250.00	SF	20.00	20.00	100	2019	2019	3	93	4,650	

LAND DESCRIPTION

TOTAL OB/XF 9,581

LN	USE CODE	CLS	LAND USE DESCRIPTION	CAP	RD	LOC ZONE	FRONT	DEPTH	TOT LND UTS	UNIT TYPE	DT	DPTH FACT	% COND	TOT ADJ	UNIT PRICE	ADJ UNIT PRICE	LAND VALUE	OTHER ADJUSTMENTS AND NOTES	YEAR	DENSITY	DECL	FRZ	YR	CONSRV
1	000115	C	SFR ACRES	100	0007	OR	0.00	0.00	18.79	AC		1.00	1.00	1.00	14,000.00	14,000.00	263,060							

REVIEW DATE 08/17/2020 BY TWA Total Acres: 18.79 Total Land Value: 263,060 Market: 0 Agricultural: 0 Common: 263,060 PRINTED 08/02/2023 BY SYS