LOT 38
IN OR 2159/1227
SHELL COVE PBK 8/150

HODGES PAMELA J
2135 SHELL COVE CIRCLE
FERNANDINA BEACH, FL 32034

2023

27-3N-28-1192-0038-0000

BUILDING CHARACTERISTICS

ELEMENT	CD	CONSTRUCTION
Exterior Wall	16	WD FR STUC 60
Exterior Wall	10	ABOVE AVG 40
Roof Structur	08	IRREGULAR 100
Roof Cover	03	COMP SHNGL 100
Interior Wall	05	DRYWALL 100
Interior Floo	11	CLAY TILE 50
Interior Floo	14	CARPET 50
Air Condition	03	CENTRAL 100
Heating Type	04	AIR DUCTED 100
Bedrooms		3 100
Bathrooms		2.5 100
Frame	02	WOOD FRAME 100
Stories	1.5	1.5 100
Units		0 100
Occupancy	00	NONE 100
Quality	05	Quality Level 05
DOR CODE	0100	SINGLE FAMILY
MAP NUM		MKT AREA 01
NEIGHBORHOOD/LOC	1011.500	

AREA TYPE	TOTAL GROSS AREA	PCT OF BASE	TOT ADJ AREA	SUBAREA MARKET VALUE
BAS	1,359	100	1,359	241,689
FGR	276	55	152	27,033
FOP	102	30	31	5,513
FOP	230	30	69	12,271
FUS	627	100	627	111,508
STR	60	10	6	1,067
TOTALS	2,654		2,244	399,080

MARKET ADJUSTMENTS

TYPE	MDL	EFF. AREA	TOT ADJ PTS	EFF. BASE RATE	REPL. COST NEW	AYB	EYB	ECON	FNCT		NORM	% COND
0500	01	2,244	127.7430	182.03	408,475	2017	2017	0	0	0	2.30	97.70

1 SFR CUST – 100% - 2018 Heated Area: 1986 HX Base Yr 2018

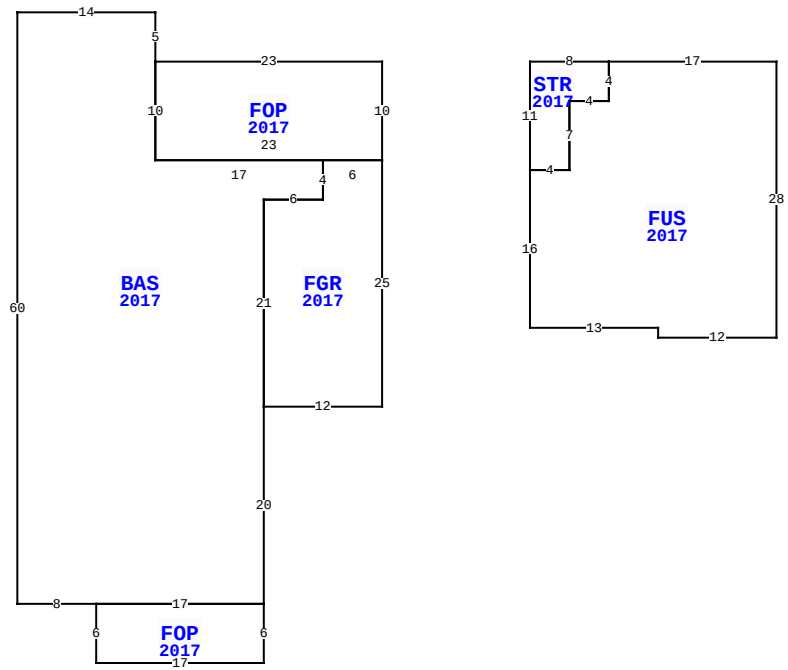

2135 SHELL COVE CR, FERNANDINA BEACH

BLD DATE		LGL DATE	
XF DATE		LAND DATE	
INC DATE		AG DATE	

NASSAU COUNTY PROPERTY

PAGE 1 of 1 2

VALUATION SUMMARY

VALUATION BY		STANDARD
Tax Group: 2	Tax Dist:	
BUILDING MARKET VALUE		399,080
TOTAL MARKET OB/XF VALUE		3,259
TOTAL LAND VALUE - MARKET		100,000
TOTAL MARKET VALUE		502,339
SOH/AGL Deduction		173,705
ASSESSED VALUE		328,634
TOTAL EXEMPTION VALUE	HX HB WX	55,000
BASE TAXABLE VALUE		273,634
TOTAL JUST VALUE		502,339
NCON VALUE		0
INCOME VALUE		
PREVIOUS YEAR MKT VALUE		441,716

PERMIT NUM	DESCRIPTION	AMT	ISSUED
20171623	NEW CONSTR	245,829	05/26/2017

SALES DATA

OFF RECORD Number	DATE	TYPE INST	Q / U	V / I	RSN CD	SALE PRICE
2159/1227	11/21/2017	SW	Q	I	01	361,700
GRANTOR: ARTISAN HOMES LLC						
GRANTEE: HODGES PAMELA J						
2093/1376	1/09/2017	SW	Q	V	05	493,500
GRANTOR: ROBINSON CREEK 34 LLC						
GRANTEE: ARTISAN HOMES LLC						

BUILDING NOTES

BUILDING DIMENSIONS

FOP=[YR=2017] W23 BAS=[YR=2017] N5 W14 S60 E8 FOP=[YR=2017] S6 E17 N6 W17$ E17 N20 FGR=[YR=2017] E12 N25 W6 S4 W6 S21$ N21 E6 N4 W17 N10$ S10 E23 N10$ PTR=E15 STR=[YR=2017] E8 FUS=[YR=2017] E17 S28 W12 N1 W13 N16 E4 N7 E4 N4$ S4 W4 S7 W4 N11$ W15$.

EXTRA FEATURES

L N	OB/XF CODE	DESCRIPTION	BLD	CAP	L	W	UNITS	UT	Adj R	ADJ UNIT PRICE	ORIG COND	YEAR ON	YEAR ACTUAL	Q	% COND	OB/XF MKT VALUE	NOTES
1	0855	CONC PAVER	0	100	0	0	480.00	SF	7.00	7.00	100	2017	2017	3	97	3,259	

LAND DESCRIPTION

TOTAL OB/XF 3,259

L N	USE CODE	CLS	LAND USE DESCRIPTION	CAP	R D	LOC ZONE	FRONT	DEPTH	TOT LND UTS	UNIT TYPE	D T	DPTH FACT	% COND	TOT ADJ	UNIT PRICE	ADJ UNIT PRICE	LAND VALUE	OTHER ADJUSTMENTS AND NOTES	YEAR	DENSITY	DECL	FRZ	YR	CONSRV
1	000100	C	SFR	100			0.00	0.00	1.00	LT		1.00	1.00	1.00	100,000.00	100,000.00	100,000							

REVIEW DATE 11/17/2017 BY DJ Total Acres: 0.00 Total Land Value: 100,000 Market: 0 Agricultural: 0 Common: 100,000 PRINTED 08/02/2023 BY SYS