LOT 33
IN OR 2217/491
SHELL COVE PBK 8/150

MCDANIEL WILLIAM J & MARY KAY
431 2ND AVE NE
CARMEL, IN 46032

2023

27-3N-28-1192-0033-0000

NASSAU COUNTY PROPERTY

BUILDING CHARACTERISTICS

ELEMENT	CD	CONSTRUCTION
Exterior Wall	16	WD FR STUC 70
Exterior Wall	10	ABOVE AVG 30
Roof Structur	03	GABLE/HIP 100
Roof Cover	03	COMP SHNGL 100
Interior Wall	05	DRYWALL 100
Interior Floo	11	CLAY TILE 60
Interior Floo	14	CARPET 40
Air Condition	03	CENTRAL 100
Heating Type	04	AIR DUCTED 100
Bedrooms		3 100
Bathrooms		2.5 100
Frame	02	WOOD FRAME 100
Stories	1.5	1.5 100
Units		0 100
Occupancy	00	NONE 100
Quality	05	Quality Level 05
DOR CODE	0100	SINGLE FAMILY
MAP NUM		MKT AREA 01
NEIGHBORHOOD/LOC	1011.500	

AREA TYPE	TOTAL GROSS AREA	PCT OF BASE	TOT ADJ AREA	SUBAREA MARKET VALUE
BAS	1,359	100	1,359	241,375
FGR	276	55	152	26,997
FOP	102	30	31	5,506
FSP	110	40	44	7,815
FUS	606	100	606	107,633
STR	56	10	6	1,066
TOTALS	2,509		2,198	390,392

MARKET ADJUSTMENTS

TYPE	MDL	EFF. AREA	TOT ADJ PTS	EFF. BASE RATE	REPL. COST NEW	AYB	EYB	ECON	FNCT		NORM	% COND
0500	01	2,198	126.9884	180.96	397,750	2018	2018	0	0	0	1.85	98.15

1 SFR CUST – 0% - 0 Heated Area: 1965 HX Base Yr

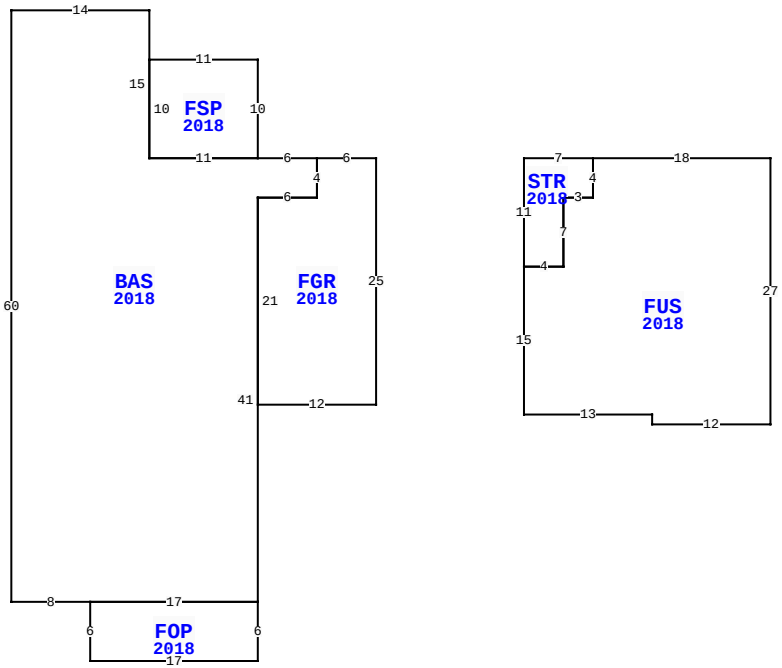

2115 SHELL COVE CR, FERNANDINA BEACH

BLD DATE		LGL DATE	
XF DATE		LAND DATE	
INC DATE		AG DATE	

VALUATION SUMMARY

VALUATION BY	STANDARD
Tax Group: 2	Tax Dist:
BUILDING MARKET VALUE	390,392
TOTAL MARKET OB/XF VALUE	3,156
TOTAL LAND VALUE - MARKET	100,000
TOTAL MARKET VALUE	493,548
SOH/AGL Deduction	65,584
ASSESSED VALUE	427,964
TOTAL EXEMPTION VALUE	0
BASE TAXABLE VALUE	427,964
TOTAL JUST VALUE	493,548
NCON VALUE	0
INCOME VALUE	
PREVIOUS YEAR MKT VALUE	434,239

PERMIT NUM	DESCRIPTION	AMT	ISSUED
20180469	CO ISSUED	0	08/01/2018
20180469	NEW CONSTR	245,889	02/09/2018

SALES DATA

OFF RECORD Number	DATE	TYPE INST	Q U	V I	RSN CD	SALE PRICE
2217/0491	8/08/2018	SW	Q	I	01	370,000
GRANTOR: ARTISAN HOMES LLC						
GRANTEE: MCDANIEL WILLIAM J						
2169/0242	1/05/2018	WD	Q	V	05	231,000
GRANTOR: ROBINSON CREEK 34 LLC						
GRANTEE: ARTISAN HOMES LLC						

BUILDING NOTES

BUILDING DIMENSIONS

FGR=[YR=2018] W6 BAS=[YR=2018] W6 FSP=[YR=2018] N10 W11 S10 E11$ W11 N15 W14 S60 E8 FOP=[YR=2018] S6 E17 N6 W17$ E17 N41 E6 N4$ S4 W6 S21 E12 N25$ PTR=E15 STR=[YR=2018] E7 FUS=[YR=2018] E18 S27 W12 N1 W13 N15 E4 N7 E3 N4$ S4 W3 S7 W4 N11$ W15$.

EXTRA FEATURES

LN	OB/XF CODE	DESCRIPTION	BLD	CAP	L	W	UNITS	UT	Adj R	ADJ UNIT PRICE	ORIG COND	YEAR ON	YEAR ACTUAL	Q	% COND	OB/XF MKT VALUE	NOTES
1	0855	CONC PAVER	0	0	0	0	460.00	SF	7.00	7.00	100	2018	2018	3	98	3,156	

LAND DESCRIPTION

TOTAL OB/XF 3,156

LN	USE CODE	CLS	LAND USE DESCRIPTION	CAP	RD	LOC ZONE	FRONT	DEPTH	TOT LND UTS	UNIT TYPE	DT	DPTH FACT	% COND	TOT ADJ	UNIT PRICE	ADJ UNIT PRICE	LAND VALUE	OTHER ADJUSTMENTS AND NOTES	YEAR	DENSITY	DECL	FRZ	YR	CONSRV
1	000100	C	SFR	0			0.00	0.00	1.00	LT		1.00	1.00	1.00	100,000.00	100,000.00	100,000							

REVIEW DATE 08/20/2018 BY DJ Total Acres: 0.00 Total Land Value: 100,000 Market: 0 Agricultural: 0 Common: 100,000 PRINTED 08/02/2023 BY SYS