PT OF S1/2 OF NW1/4 &
PT OF N1/2 OF SW1/4 OF
SEC 27-3N-25E IN OR 1975/505

PEEPLES HERBERT W JR & TAMMIE
55065 COUNTREE LIFE
CALLAHAN, FL 32011

2023

27-3N-25-0000-0003-0090

BUILDING CHARACTERISTICS

ELEMENT	CD	CONSTRUCTION
Exterior Wall	20	FACE BRICK 100
Roof Structur	03	GABLE/HIP 100
Roof Cover	03	COMP SHNGL 100
Interior Wall	05	DRYWALL 100
Interior Floo	12	HARDWOOD 100
Air Condition	03	CENTRAL 100
Heating Type	04	AIR DUCTED 100
Bedrooms		2 100
Bathrooms		2 100
Frame	02	WOOD FRAME 100
Stories	1.	1. 100
Units		0 100
Occupancy	00	NONE 100
Quality	03	Quality Level 03
DOR CODE	5000	IMPROVED AG
MAP NUM		MKT AREA 05
NEIGHBORHOOD/LOC	5001.00	

AREA TYPE	TOTAL GROSS AREA	PCT OF BASE	TOT ADJ AREA	SUBAREA MARKET VALUE
BAS	1,550	100	1,550	201,214
FGR	510	55	280	36,348
FOP	128	30	38	4,933
PTO	252	5	13	1,688
STP	12	10	1	130
STR	24	10	2	260
UUS	165	50	82	10,645
TOTALS	2,641		1,966	255,217

MARKET ADJUSTMENTS

TYPE	MDL	EFF. AREA	TOT ADJ PTS	EFF. BASE RATE	REPL. COST NEW	AYB	EYB	ECON	FNCT		NORM	% COND
0900	01	1,966	112.7000	133.83	263,110	2018	2018	0	0	0	3.00	97.00

1 SNGL FAM – 100% - 2019 Heated Area: 1550 HX Base Yr 2019

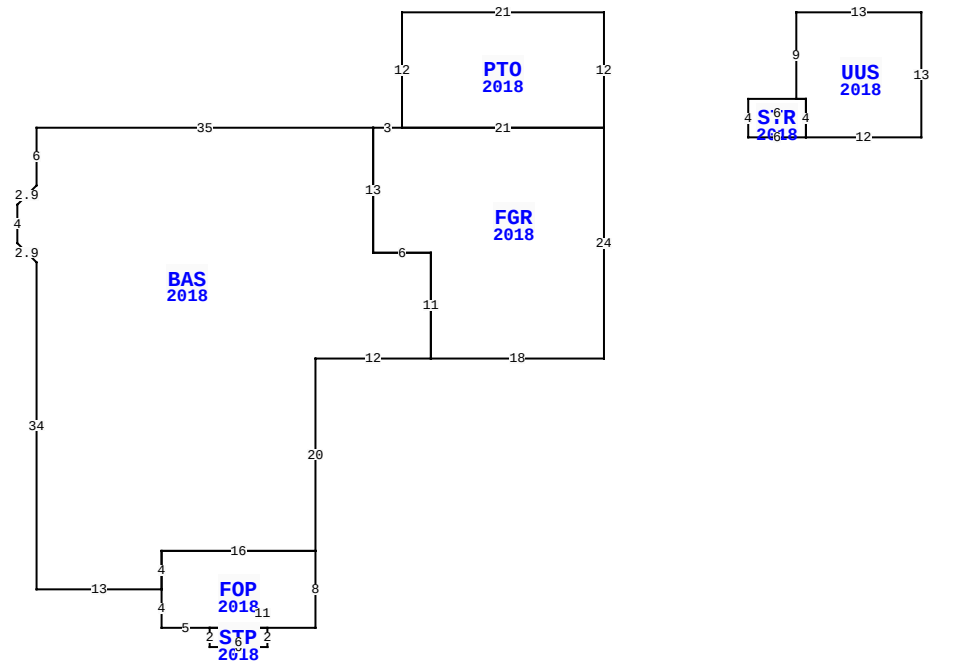

55065 COUNTREE LIFE WAY, CALLAHAN

BLD DATE		LGL DATE	
XF DATE		LAND DATE	05/30/2023 MLU
INC DATE		AG DATE	

NASSAU COUNTY PROPERTY

PAGE 1 of 1 4

VALUATION SUMMARY

VALUATION BY		STANDARD
Tax Group: 4	Tax Dist:	
BUILDING MARKET VALUE		255,217
TOTAL MARKET OB/XF VALUE		34,066
TOTAL LAND VALUE - MARKET		278,000
TOTAL MARKET VALUE		492,998
SOH/AGL Deduction		226,529
ASSESSED VALUE		266,469
TOTAL EXEMPTION VALUE	HX HB	50,000
BASE TAXABLE VALUE		216,469
TOTAL JUST VALUE		567,283
NCON VALUE		0
INCOME VALUE		
PREVIOUS YEAR MKT VALUE		345,919

PERMIT NUM	DESCRIPTION	AMT	ISSUED
17000352	CO ISSUED	0	05/08/2018
18004188	GARAGE	0	05/01/2018
17000352	NEW CONSTR	199,195	03/01/2017

SALES DATA

OFF RECORD Number	DATE	TYPE INST	Q U	V I	RSN CD	SALE PRICE
1975/0505	4/17/2015	WD	Q	V	01	114,000

GRANTOR: PAGE COREY & CHRISTIN

GRANTEE: PEEPLES HERBERT W J

BUILDING NOTES

BUILDING DIMENSIONS

PTO=[YR=2018] W21 S12 FGR=[YR=2018] W3 BAS=[YR=2018] W35 S6 L2 D2 S4 D2 R2 S34 E13 FOP=[YR=2018] S4E5 STP=[YR=2018] S2 E6 N2 W6$ E11 N8 W16 S4$ N4 E16 N20 E12 N11 W6 N13$ S13 E6 S11 E18 N24 W21$ E21 N12$ PTR= E20 UUS=[YR=2018] E13 S13 W12 STR=[YR=2018] W6 N4 E6 S4$ N4 W1 N9 $ W20$.

EXTRA FEATURES

LN	OB/XF CODE	DESCRIPTION	BLD	CAP	L	W	UNITS	UT	Adj R	ADJ UNIT PRICE	ORIG COND	YEAR ON	YEAR ACTUAL	Q	% COND	OB/XF MKT VALUE	NOTES
1	0812	CONCRETE C	0	100	0	0	3,180.00	SF	4.00	4.00	100	2018	2018	3	98	12,466	
2	0680	POLE SHED	0	100	40	60	2,400.00	SF	10.00	10.00	100	2018	2018	3	90	21,600	

LAND DESCRIPTION

TOTAL OB/XF 34,066

LN	USE CODE	CLS	LAND USE DESCRIPTION	CAP	RD	LOC ZONE	FRONT	DEPTH	TOT LND UTS	UNIT TYPE	DT	DPTH FACT	% COND	TOT ADJ	UNIT PRICE	ADJ UNIT PRICE	LAND VALUE	OTHER ADJUSTMENTS AND NOTES	YEAR	DENSITY	DECL	FRZ	YR	CONSRV
1	005000	C	RURAL HOME	100			0.00	0.00	2.00	AC		1.00	1.00	1.00	35,000.00	35,000.00	70,000							
2	005901	A	HARDWOOD SI	0			0.00	0.00	3.00	AC		1.00	1.00	1.00	225.00	225.00	675							
3	005400	A	TIMBER 1 SI	0			0.00	0.00	7.00	AC		1.00	1.00	1.00	720.00	720.00	5,040							
4	000115	C	SFR ACRES	100			0.00	0.00	8.00	AC		1.00	1.00	1.00	16,000.00	16,000.00	128,000							
5	009910	M	MKT.VAL.AG	0			0.00	0.00	10.00	AC		1.00	1.00	1.00	8,000.00	8,000.00	80,000							

REVIEW DATE 02/04/2019 BY KB Total Acres: 20.00 Total Land Value: 203,715 Market: 80,000 Agricultural: 5,715 Common: 198,000 PRINTED 08/02/2023 BY SYS