PT GOVT LOT 1 OF SEC 27-2N-28E
IN OR 2505/739 & OR 2605/457
(EX UTIL ESMT IN OR 1457/940 &

WOODS GANNON J & SARAHBETH E
942611 OLD NASSAUVILLE RD
FERNANDINA BEACH, FL 32034

2023

27-2N-28-0000-0008-0000

NASSAU COUNTY PROPERTY

BUILDING CHARACTERISTICS

ELEMENT	CD	CONSTRUCTION
Exterior Wall	05	AVERAGE 100
Roof Structur	03	GABLE/HIP 100
Roof Cover	03	COMP SHNGL 100
Interior Wall	05	DRYWALL 80
Interior Wall	04	PLYWOOD 20
Interior Floo	12	HARDWOOD 60
Interior Floo	13	LVT/LAMNT 40
Air Condition	03	CENTRAL 100
Heating Type	04	AIR DUCTED 100
Bedrooms		3 100
Bathrooms		1.5 100
Frame	02	WOOD FRAME 100
Stories	1.	1. 100
Units		0 100
BUD8 Adjustme	04	DIST 01 100
Occupancy	00	NONE 100
Quality	06	Quality Level 06
DOR CODE	0100	SINGLE FAMILY
MAP NUM		MKT AREA 04
NEIGHBORHOOD/LOC	4005.00	

AREA TYPE	TOTAL GROSS AREA	PCT OF BASE	TOT ADJ AREA	SUBAREA MARKET VALUE
BAS	1,429	100	1,429	149,821
FGR	520	55	286	29,986
FOP	20	30	6	629
UCP	100	20	20	2,097
UCP	200	20	40	4,193
USP	50	30	15	1,572
TOTALS	2,319		1,796	188,298

MARKET ADJUSTMENTS

TYPE	MDL	EFF. AREA	TOT ADJ PTS	EFF. BASE RATE	REPL. COST NEW	AYB	EYB	ECON	FNCT		NORM	% COND
0100	01	1,796	126.2700	113.96	204,672	1960	2005	0	0	0	8.00	92.00

1 SINGLE FAM – 100% - 2022 Heated Area: 1429 HX Base Yr 2022

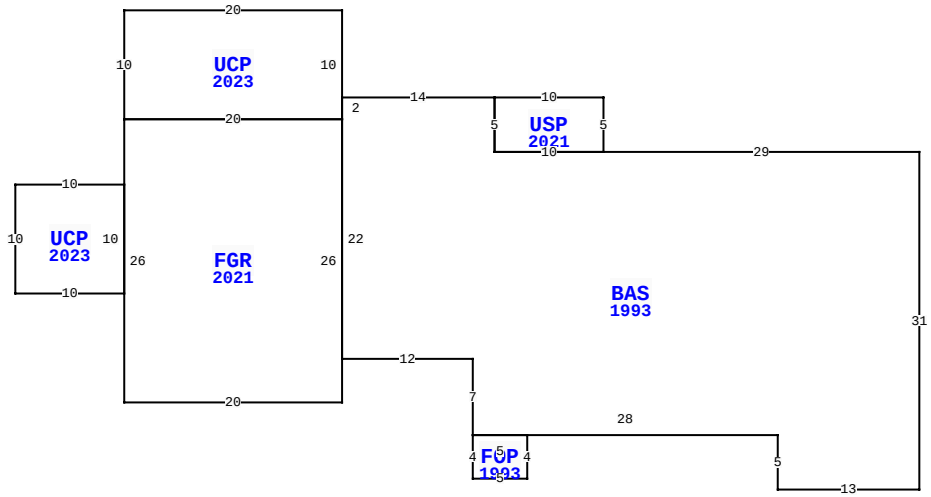

942611 OLD NASSAUVILLE RD, FERNANDINA BEACH

BLD DATE		LGL DATE	
XF DATE		LAND DATE	05/30/2023 MLU
INC DATE		AG DATE	

NASSAU COUNTY PROPERTY VALUATION SUMMARY

VALUATION BY		STANDARD
Tax Group: 4	Tax Dist:	
BUILDING MARKET VALUE		188,298
TOTAL MARKET OB/XF VALUE		1,800
TOTAL LAND VALUE - MARKET		128,259
TOTAL MARKET VALUE		318,357
SOH/AGL Deduction		59,686
ASSESSED VALUE		258,671
TOTAL EXEMPTION VALUE	HX HB XM	50,000
BASE TAXABLE VALUE		208,671
TOTAL JUST VALUE		318,357
NCON VALUE		0
INCOME VALUE		
PREVIOUS YEAR MKT VALUE		188,871

PERMIT NUM	DESCRIPTION	AMT	ISSUED
E2201400	CHNGE SRVC	1,000	01/24/2022
B0312004	XFOB	0	12/01/2003
960517	REPAIR/RRF	1,200	09/01/1996

SALES DATA

OFF RECORD Number	DATE	TYPE INST	Q U	V I	RSN CD	SALE PRICE
2605/0457	11/28/2022	WD	U	I	11	100
GRANTOR: HARPER MARK						
GRANTEE: TURN-KEY ASSET MANA						
2505/0739	10/14/2021	WD	Q	I	05	300,000
GRANTOR: TURN-KEY ASSET MANAGE						
GRANTEE: WOODS GANNON JARED						

BUILDING NOTES

BUILDING DIMENSIONS

BAS=[YR=1993;ORIG=0,0] W29 W10 N5 W14 S2 S22 E12 S7 E28 S5 E13 N31 $
FGR=[YR=2021;ORIG=-53,-3] W20 S26 E20 N26 $
USP=[YR=2021;ORIG=-29,0] N5 W10 S5 E10 $
FOP=[YR=1993;ORIG=-41,26] S4 E5 N4 W5 $
UCP=[YR=2023;ORIG=-73,-3] E20 N10 W20 S10 $
UCP=[YR=2023;ORIG=-73,13] W10 N10 E10 S10 $
.

EXTRA FEATURES

LN	OB/XF CODE	DESCRIPTION	BLD	CAP	L	W	UNITS	UT	Adj R	ADJ UNIT PRICE	ORIG COND	YEAR ON	YEAR ACTUAL	Q	% COND	OB/XF MKT VALUE	NOTES
1	0940	SHEDS/PORT	0	100	25	8	200.00	SF	18.00	18.00	100	2010	2010	3	50	1,800	

LAND DESCRIPTION

TOTAL OB/XF 1,800

LN	USE CODE	CLS	LAND USE DESCRIPTION	CAP	RD	LOC ZONE	FRONT	DEPTH	TOT LND UTS	UNIT TYPE	DT	DPTH FACT	% COND	TOT ADJ	UNIT PRICE	ADJ UNIT PRICE	LAND VALUE	OTHER ADJUSTMENTS AND NOTES	YEAR	DENSITY	DECL	FRZ	YR	CONSRV
1	000115	C	SFR ACRES	100		RS-2	0.00	0.00	0.57	AC		1.00	1.00	1.50	75,000.00	112,500.00	64,125							
2	000115	C	SFR ACRES	100		RS-2	0.00	0.00	0.68	AC		1.00	1.00	1.25	75,000.00	93,750.00	64,125							
3	009400	C	RIGHTOFWAY	100					0.09	AC		1.00	1.00	1.00	100.00	100.00	9							

REVIEW DATE 07/27/2023 BY NW Total Acres: 1.34 Total Land Value: 128,259 Market: 0 Agricultural: 0 Common: 128,259 PRINTED 08/02/2023 BY SYS