LOT 7
IN OR 2237/1359
THE TRAILS PB 6/296

THOMAS ROBERT ANDREW & JAMI R
55238 PEACEFUL TRAIL DRIVE
CALLAHAN, FL 32011

2023

27-2N-25-8600-0007-0000

BUILDING CHARACTERISTICS

ELEMENT	CD	CONSTRUCTION
Exterior Wall	16	WD FR STUC 100
Roof Structur	08	IRREGULAR 100
Roof Cover	03	COMP SHNGL 100
Interior Wall	05	DRYWALL 100
Interior Floo	11	CLAY TILE 70
Interior Floo	14	CARPET 30
Air Condition	03	CENTRAL 100
Heating Type	04	AIR DUCTED 100
Bedrooms		3 100
Bathrooms		3.5 100
Frame	02	WOOD FRAME 100
Stories	2.	2. 100
Units		0 100
Occupancy	00	NONE 100
Quality	02	Quality Level 02
DOR CODE	0100	SINGLE FAMILY
MAP NUM		MKT AREA 08
NEIGHBORHOOD/LOC	8023.00	

AREA TYPE	TOTAL GROSS AREA	PCT OF BASE	TOT ADJ AREA	SUBAREA MARKET VALUE
BAS	1,682	100	1,682	217,963
FOP	24	30	7	907
FOP	45	30	14	1,814
FSP	480	40	192	24,880
FUS	742	100	742	96,153
STR	68	10	7	907
TOTALS	3,041		2,644	342,624

MARKET ADJUSTMENTS

TYPE	MDL	EFF. AREA	TOT ADJ PTS	EFF. BASE RATE	REPL. COST NEW	AYB	EYB	ECON	FNCT		NORM	% COND
0900	01	2,644	111.3552	132.23	349,616	2018	2018	0	0	0	2.00	98.00

1 SNGL FAM – 100% - 2019 Heated Area: 2424 HX Base Yr 2019

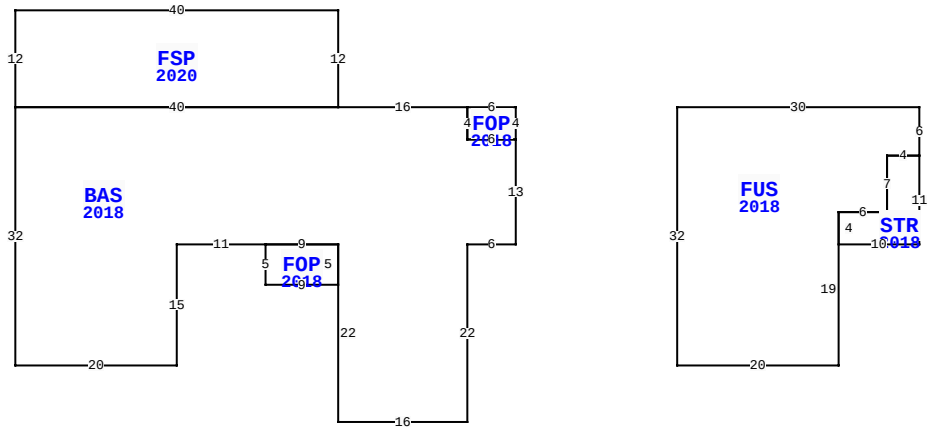

55238 PEACEFUL TRAIL DR, CALLAHAN

BLD DATE	03/03/2023	NW	LGL DATE
XF DATE			LAND DATE
INC DATE			AG DATE

NASSAU COUNTY PROPERTY

PAGE 1 of 1 6

VALUATION SUMMARY

VALUATION BY		STANDARD
Tax Group: 6	Tax Dist:	
BUILDING MARKET VALUE		342,624
TOTAL MARKET OB/XF VALUE		0
TOTAL LAND VALUE - MARKET		50,000
TOTAL MARKET VALUE		392,624
SOH/AGL Deduction		110,995
ASSESSED VALUE		281,629
TOTAL EXEMPTION VALUE	HX HB	50,000
BASE TAXABLE VALUE		231,629
TOTAL JUST VALUE		392,624
NCON VALUE		0
INCOME VALUE		
PREVIOUS YEAR MKT VALUE		311,007

PRMT:3:1: ACCESSORY BLDG: HTD 763/ FGR 1084 / FOP

PERMIT NUM	DESCRIPTION	AMT	ISSUED
B2216707	NEW CONSTR	203,968	11/08/2022
18011422	CO ISSUED	0	11/15/2018
18002815	NEW CONSTR	301,356	05/01/2018

SALES DATA

OFF RECORD Number	DATE	TYPE INST	Q / U	V / I	RSN CD	SALE PRICE
2237/1359	11/16/2018	WD	Q	I	01	235,000
GRANTOR: YOUNG AMERICAN HOMES						
GRANTEE: THOMAS ROBERT ANDRE						
2182/1727	3/09/2018	WD	Q	V	01	37,800
GRANTOR: YOUNG JONATHAN S						
GRANTEE: YOUNG AMERICAN HOME						

BUILDING NOTES

BUILDING DIMENSIONS

FOP=[YR=2018] W6 BAS=[YR=2018] W16 FSP=[YR=2020] N12 W40 S12 E40$ W40 S32 E20 N15 E11 FOP=[YR=2018] S5 E9 N5 W9$ E9 S22 E16 N22 E6 N13 W6 N4$ S4 E6 N4$ PTR= E20 FUS=[YR=2018] E30 S6 STR=[YR=2018] S11 W10 N4 E6 N7 E4$ W4 S7 W6 S19 W20 N32$ W20$.

EXTRA FEATURES

LN	OB/XF CODE	DESCRIPTION	BLD	CAP	L	W	UNITS	UT	Adj R	ADJ UNIT PRICE	ORIG COND	YEAR ON	YEAR ACTUAL	Q	% COND	OB/XF MKT VALUE	NOTES

LAND DESCRIPTION

TOTAL OB/XF 0

LN	USE CODE	CLS	LAND USE DESCRIPTION	CAP	RD	LOC ZONE	FRONT	DEPTH	TOT LND UTS	UNIT TYPE	DT	DPTH FACT	% COND	TOT ADJ	UNIT PRICE	ADJ UNIT PRICE	LAND VALUE	OTHER ADJUSTMENTS AND NOTES	YEAR	DENSITY	DECL	FRZ	YR	CONSRV
1	000100	C	SFR	100	0006	OR	0.00	0.00	1.00	LT		1.00	1.00	1.00	50,000.00	50,000.00	50,000							

REVIEW DATE 07/25/2023 BY KW Total Acres: 0.00 Total Land Value: 50,000 Market: 0 Agricultural: 0 Common: 50,000 PRINTED 08/02/2023 BY SYS