PT OF SE1/4 OF SEC 27-2N-23E
IN OR 2233/856
(EX OR 2233/850)

ATKINS DREW HORNER & NICHOLE B
3200 JANE LANE
HILLIARD, FL 32046

2023

27-2N-23-0000-0001-0240

NASSAU COUNTY PROPERTY

BUILDING CHARACTERISTICS

ELEMENT	CD	CONSTRUCTION
Exterior Wall	10	ABOVE AVG 100
Roof Structur	08	IRREGULAR 100
Roof Cover	03	COMP SHNGL 100
Interior Wall	05	DRYWALL 100
Interior Floo	08	SHT VINYL 70
Interior Floo	11	CLAY TILE 30
Air Condition	03	CENTRAL 100
Heating Type	04	AIR DUCTED 100
Bedrooms		3 100
Bathrooms		2.5 100
Frame	02	WOOD FRAME 100
Stories	0	0 100
Units		0 100
Occupancy	00	NONE 100
Quality	02	Quality Level 02

DOR CODE	0100	SINGLE FAMILY	
MAP NUM		MKT AREA	09
NEIGHBORHOOD/LOC	9001.00		

AREA TYPE	TOTAL GROSS AREA	PCT OF BASE	TOT ADJ AREA	SUBAREA MARKET VALUE
BAS	2,003	100	2,003	226,423
FGR	575	55	316	35,721
FOP	265	30	80	9,044
FOP	624	30	187	21,139
FUS	899	100	899	101,624
STR	52	10	5	565
UUS	299	50	150	16,957
TOTALS	4,717		3,640	411,472

MARKET ADJUSTMENTS

TYPE	MDL	EFF. AREA	TOT ADJ PTS	EFF. BASE RATE	REPL. COST NEW	AYB	EYB	ECON	FNCT		NORM	% COND
0900	01	3,640	95.6745	113.61	413,540	2020	2020	0	0	0	0.50	99.50

1 SNGL FAM – 100% - 2021 Heated Area: 2902 HX Base Yr 2021

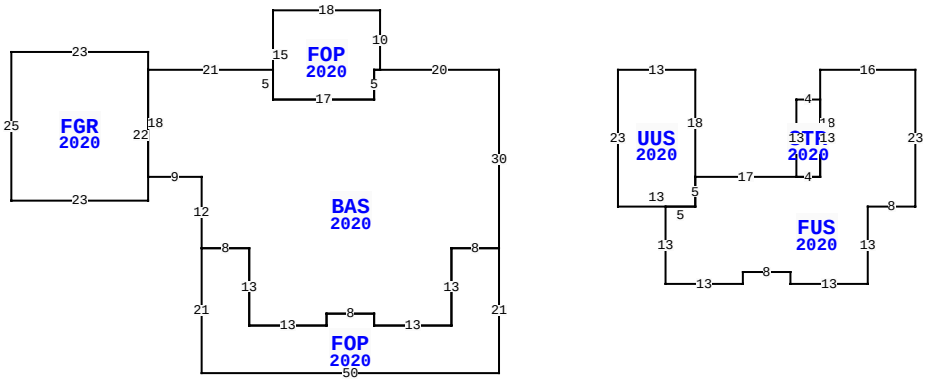

3200 JANE LN, HILLIARD

BLD DATE	03/03/2023 NW	LGL DATE	
XF DATE		LAND DATE	06/16/2023 MLU
INC DATE		AG DATE	

NASSAU COUNTY PROPERTY — VALUATION SUMMARY

VALUATION BY		STANDARD
Tax Group: 6	Tax Dist:	
BUILDING MARKET VALUE		411,472
TOTAL MARKET OB/XF VALUE		9,658
TOTAL LAND VALUE - MARKET		143,640
TOTAL MARKET VALUE		564,770
SOH/AGL Deduction		106,985
ASSESSED VALUE		457,785
TOTAL EXEMPTION VALUE	HX HB	50,000
BASE TAXABLE VALUE		407,785
TOTAL JUST VALUE		564,770
NCON VALUE		0
INCOME VALUE		
PREVIOUS YEAR MKT VALUE		504,909

PERMIT NUM	DESCRIPTION	AMT	ISSUED
20008849	CO ISSUED	0	09/24/2020
20002546	NEW CONSTR	405,038	03/20/2020

SALES DATA

OFF RECORD Number	DATE	TYPE INST	Q U	V I	RSN CD	SALE PRICE
2233/0856	10/29/2018	WD	U	V	37	60,000
GRANTOR: BURKE JOHN PAUL & RHO						
GRANTEE: ATKINS DREW HORNER						
2233/0852	10/29/2018	WD	Q	V	01	60,000
GRANTOR: BURKE JOHN PAUL & RHO						
GRANTEE: ATKINS DREW HORNER						

BUILDING NOTES

BUILDING DIMENSIONS

BAS=[YR=2020] W20 FOP=[YR=2020] N10 W18 S15 E17 N5 E1$ W1 S5 W17 N5 W21 FGR=[YR=2020] N3 W23 S25 E23 N22 $ S18 E9 S12 FOP=[YR=2020] S21 E50 N21 W8 S13 W13 N2 W8 S2 W13 N13 W8$ E8 S13 E13 N2 E8 S2 E13 N13 E8 N30$ PTR= E20 UUS=[YR=2020] E13 S18 FUS=[YR=2020] E17 STR=[YR=2020] N13 E4 S13 W4$ E4 N18 E16 S23 W8 S13 W13 N2 W8 S2 W13 N13 E5 N5$ S5 W13 N23$ W20 $.

EXTRA FEATURES

LN	OB/XF CODE	DESCRIPTION	BLD	CAP	L	W	UNITS	UT	Adj R	ADJ UNIT PRICE	ORIG COND	YEAR ON	YEAR ACTUAL	Q	% COND	OB/XF MKT VALUE	NOTES
1	0812	CONCRETE C	0	100	0	0	2,439.00	SF	4.00	4.00	100	2020	2020	3	99	9,658	

LAND DESCRIPTION

TOTAL OB/XF 9,658

LN	USE CODE	CLS	LAND USE DESCRIPTION	CAP	RD	LOC ZONE	FRONT	DEPTH	TOT LND UTS	UNIT TYPE	DT	DPTH FACT	% COND	TOT ADJ	UNIT PRICE	ADJ UNIT PRICE	LAND VALUE	OTHER ADJUSTMENTS AND NOTES	YEAR	DENSITY	DECL	FRZ	YR	CONSRV
1	000115	C	SFR ACRES	100			0.00	0.00	7.56	AC		1.00	1.00	1.00	19,000.00	19,000.00	143,640							

REVIEW DATE 11/23/2020 BY TW Total Acres: 7.56 Total Land Value: 143,640 Market: 0 Agricultural: 0 Common: 143,640 PRINTED 08/02/2023 BY SYS