LOT 293
FLORA PARKE UNIT 7B OR 2344/24

**MONAHAN KAITLIN & CHRISTOPHER**
35116 MIMOSA PARKE PL
FERNANDINA BEACH, FL 32034

**2023**

**26-2N-28-0557-0293-0000**

## BUILDING CHARACTERISTICS

| ELEMENT | CD | CONSTRUCTION |
|---|---|---|
| Exterior Wall | 31 | HARDIE BRD 100 |
| Roof Structur | 08 | IRREGULAR 100 |
| Roof Cover | 03 | COMP SHNGL 100 |
| Interior Wall | 05 | DRYWALL 100 |
| Interior Floo | 11 | CLAY TILE 50 |
| Interior Floo | 14 | CARPET 50 |
| Air Condition | 03 | CENTRAL 100 |
| Heating Type | 04 | AIR DUCTED 100 |
| Bedrooms | | 4 100 |
| Bathrooms | | 3 100 |
| Frame | 02 | WOOD FRAME 100 |
| Stories | 1.5 | 1.5 100 |
| Units | | 0 100 |
| Occupancy | 00 | NONE 100 |
| Quality | 03 | Quality Level 03 |
| DOR CODE | 0100 | SINGLE FAMILY |
| MAP NUM | | MKT AREA 04 |
| NEIGHBORHOOD/LOC | 4041.00 | |

| AREA TYPE | TOTAL GROSS AREA | PCT OF BASE | TOT ADJ AREA | SUBAREA MARKET VALUE |
|---|---|---|---|---|
| BAS | 2,038 | 100 | 2,038 | 267,304 |
| FGR | 684 | 55 | 376 | 49,316 |
| FOP | 108 | 30 | 32 | 4,197 |
| FSP | 200 | 40 | 80 | 10,493 |
| FST | 12 | 55 | 7 | 918 |
| FST | 18 | 55 | 10 | 1,312 |
| FUS | 380 | 100 | 380 | 49,841 |
| STR | 40 | 10 | 4 | 525 |
| TOTALS | 3,480 | | 2,927 | 383,905 |

## MARKET ADJUSTMENTS

| TYPE | MDL | EFF. AREA | TOT ADJ PTS | EFF. BASE RATE | REPL. COST NEW | AYB | EYB | ECON | FNCT | | NORM | % COND |
|---|---|---|---|---|---|---|---|---|---|---|---|---|
| 0900 | 01 | 2,927 | 110.4500 | 131.16 | 383,905 | 2022 | 2022 | 0 | 0 | 0 | 0.00 | 100.00 |

1 SNGL FAM – 0% - 2023 Heated Area: 2418 HX Base Yr

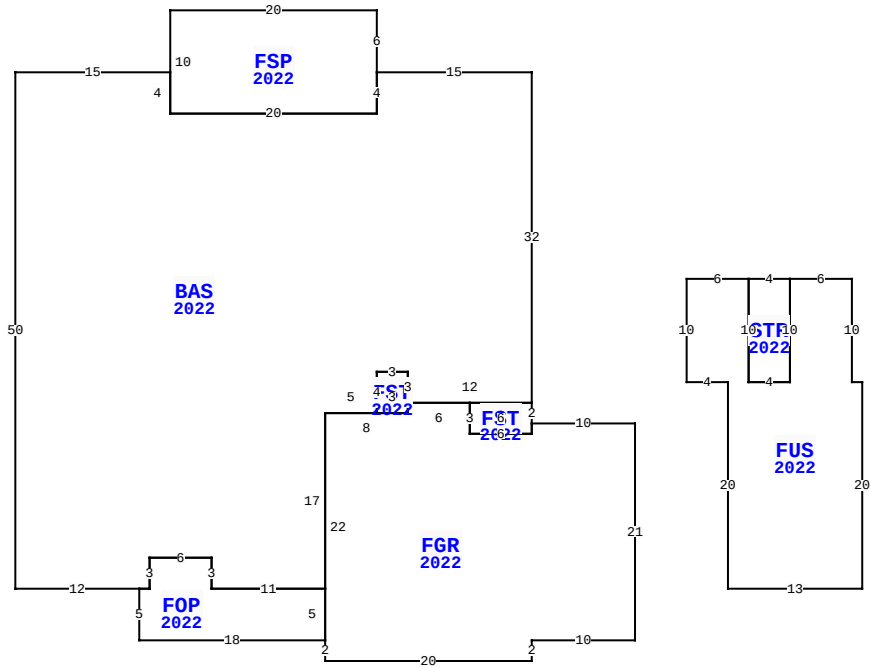


35116 MIMOSA PARKE PL, FERNANDINA BEACH

| | | | |
|---|---|---|---|
| BLD DATE | | LGL DATE | |
| XF DATE | | LAND DATE | |
| INC DATE | | AG DATE | |

## NASSAU COUNTY PROPERTY

PAGE 1 of 1 4

### VALUATION SUMMARY

| | |
|---|---|
| VALUATION BY | STANDARD |
| Tax Group: 4 | Tax Dist: |
| BUILDING MARKET VALUE | 383,905 |
| TOTAL MARKET OB/XF VALUE | 10,330 |
| TOTAL LAND VALUE - MARKET | 65,000 |
| TOTAL MARKET VALUE | 459,235 |
| SOH/AGL Deduction | 0 |
| ASSESSED VALUE | 459,235 |
| TOTAL EXEMPTION VALUE | 0 |
| BASE TAXABLE VALUE | 459,235 |
| TOTAL JUST VALUE | 459,235 |
| NCON VALUE | 394,235 |
| INCOME VALUE | |
| PREVIOUS YEAR MKT VALUE | 65,000 |

| PERMIT NUM | DESCRIPTION | AMT | ISSUED |
|---|---|---|---|
| B2107471 | CO ISSUED | 0 | 03/18/2022 |
| B2107471 | NEW CONSTR | 347,393 | 06/09/2021 |

## SALES DATA

| OFF RECORD Number | DATE | TYPE INST | Q / U | V / I | RSN CD | SALE PRICE |
|---|---|---|---|---|---|---|
| 2548/1553 | 3/21/2022 | WD | Q | I | 01 | 447,800 |
| GRANTOR: SEDA CONSTRUCTION COM | | | | | | |
| GRANTEE: MONAHAN KAITLIN M & | | | | | | |
| 2487/0541 | 7/19/2021 | WD | U | V | 30 | 75,000 |
| GRANTOR: FLORA PARKE DEVELOPME | | | | | | |
| GRANTEE: SEDA CONSTRUCTION C | | | | | | |

## BUILDING NOTES

## BUILDING DIMENSIONS

BAS=[YR=2022] W15 FSP=[YR=2022] N6 W20 S10 E20 N4$ S4 W20 N4 W15 S50 E12 FOP=[YR=2022] S5 E18 FGR=[YR=2022] S2 E20 N2 E10 N21 W10 FST=[YR=2022] N2 W6 S3 E6 N1$ S1 W6 N3 W6 FST=[YR=2022] N3 W3 S4 E3 N1$ S1 W8 S22$ N5 W11 N3 W6 S3 W1$ E1 N3 E6 S3 E11 N17 E5 N4 E3 S3 E12 N32$ PTR= E15 S20 FUS=[YR=2022] E6 STR=[YR=2022] E4 S10 W4 N10$ S10 E4 N10 E6 S10 E1 S20 W13 N20 W4 N10$ N20 W15$.

## EXTRA FEATURES

| LN | OB/XF CODE | DESCRIPTION | BLD | CAP | L | W | UNITS | UT | Adj R | ADJ UNIT PRICE | ORIG COND | YEAR ON | YEAR ACTUAL | Q | % COND | OB/XF MKT VALUE | NOTES |
|---|---|---|---|---|---|---|---|---|---|---|---|---|---|---|---|---|---|
| 1 | 0811 | CONCRETE B | 0 | 0 | 0 | 0 | 948.00 | SF | 5.20 | 5.20 | 100 | 2022 | 2022 | 3 | 100 | 4,930 | |
| 2 | 0476 | VF 6 SBPL | 0 | 0 | 0 | 0 | 150.00 | LF | 32.00 | 32.00 | 100 | 2022 | 2022 | 3 | 100 | 4,800 | |
| 3 | 0470 | VNYL GATE | 0 | 0 | 0 | 0 | 2.00 | UT | 300.00 | 300.00 | 100 | 2022 | 2022 | 3 | 100 | 600 | |

## LAND DESCRIPTION

TOTAL OB/XF 10,330

| LN | USE CODE | CLS | LAND USE DESCRIPTION | CAP | RD | LOC ZONE | FRONT | DEPTH | TOT LND UTS | UNIT TYPE | DT | DPTH FACT | % COND | TOT ADJ | UNIT PRICE | ADJ UNIT PRICE | LAND VALUE | OTHER ADJUSTMENTS AND NOTES | YEAR | DENSITY | DECL | FRZ | YR | CONSRV |
|---|---|---|---|---|---|---|---|---|---|---|---|---|---|---|---|---|---|---|---|---|---|---|---|---|
| 1 | 000100 | C | SFR | 0 | | | 0.00 | 0.00 | 1.00 | LT | | 1.00 | 1.00 | 1.00 | 65,000.00 | 65,000.00 | 65,000 | | | | | | | |

REVIEW DATE 07/26/2022 BY KW Total Acres: 0.00 Total Land Value: 65,000 Market: 0 Agricultural: 0 Common: 65,000 PRINTED 08/02/2023 BY SYS