LOT 222
FLORA PARKE UNIT 6B PBK 8/283

LEVICKE JOHN F & RITA J
32404 FERN PARKE WAY
FERNANDINA BEACH, FL 32034

2023

26-2N-28-0556-0222-0000

NASSAU COUNTY PROPERTY

BUILDING CHARACTERISTICS

ELEMENT	CD	CONSTRUCTION
Exterior Wall	10	ABOVE AVG 100
Roof Structur	08	IRREGULAR 100
Roof Cover	03	COMP SHNGL 100
Interior Wall	05	DRYWALL 100
Interior Floo	11	CLAY TILE 50
Interior Floo	14	CARPET 50
Air Condition	03	CENTRAL 100
Heating Type	04	AIR DUCTED 100
Bedrooms		4 100
Bathrooms		3 100
Frame	02	WOOD FRAME 100
Stories	1.5	1.5 100
Units		0 100
Occupancy	00	NONE 100
Quality	03	Quality Level 03
DOR CODE	0100	SINGLE FAMILY
MAP NUM		MKT AREA 04
NEIGHBORHOOD/LOC	4041.00	

AREA TYPE	TOTAL GROSS AREA	PCT OF BASE	TOT ADJ AREA	SUBAREA MARKET VALUE
BAS	2,038	100	2,038	270,260
FGR	486	55	267	35,407
FOP	108	30	32	4,243
FOP	200	30	60	7,957
FST	12	55	7	929
FST	18	55	10	1,327
FUS	389	100	389	51,586
STR	24	10	2	265
TOTALS	3,275		2,805	371,973

MARKET ADJUSTMENTS

TYPE	MDL	EFF. AREA	TOT ADJ PTS	EFF. BASE RATE	REPL. COST NEW	AYB	EYB	ECON	FNCT		NORM	% COND
0900	01	2,805	112.8000	133.95	375,730	2019	2019	0	0	0	1.00	99.00

1 SNGL FAM – 0% - 0 Heated Area: 2427 HX Base Yr

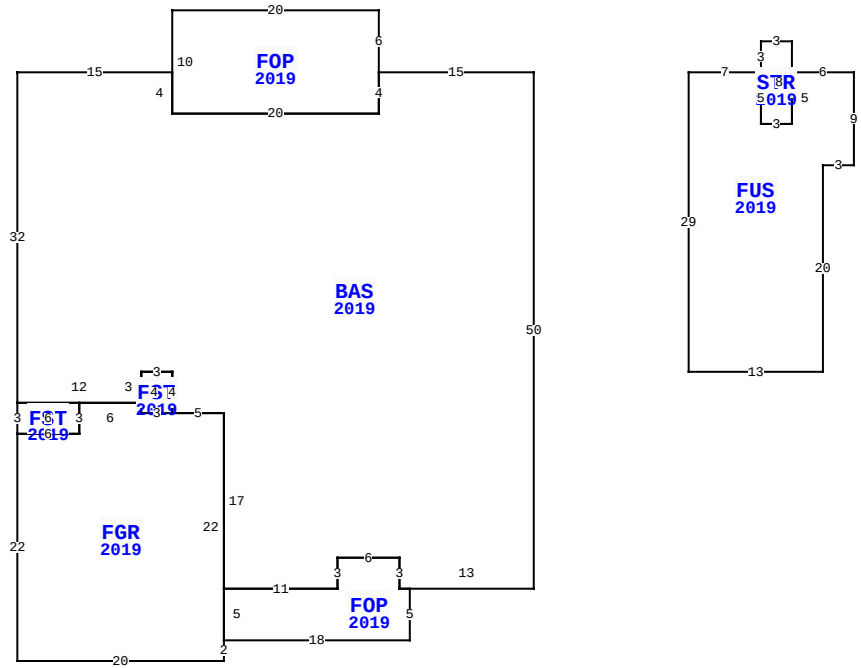

32404 FERN PARKE WAY, FERNANDINA BEACH

BLD DATE		LGL DATE	
XF DATE		LAND DATE	
INC DATE		AG DATE	

VALUATION SUMMARY

VALUATION BY	STANDARD
Tax Group: 4	Tax Dist:
BUILDING MARKET VALUE	371,973
TOTAL MARKET OB/XF VALUE	3,131
TOTAL LAND VALUE - MARKET	65,000
TOTAL MARKET VALUE	440,104
SOH/AGL Deduction	55,297
ASSESSED VALUE	384,807
TOTAL EXEMPTION VALUE	0
BASE TAXABLE VALUE	384,807
TOTAL JUST VALUE	440,104
NCON VALUE	0
INCOME VALUE	
PREVIOUS YEAR MKT VALUE	349,825

PERMIT NUM	DESCRIPTION	AMT	ISSUED
C1905002	CO ISSUED	0	10/24/2019
19005002	NEW CONSTR	324,043	05/14/2019

SALES DATA

OFF RECORD Number	DATE	TYPE INST	Q U	V I	RSN CD	SALE PRICE
2437/1214	2/22/2021	WD	Q	I	02	385,000
GRANTOR: SOWELL GEORGE C JR &						
GRANTEE: LEVICKE JOHN F & RI						
2346/1693	3/04/2020	WD	Q	I	01	343,500
GRANTOR: SEDA CONSTRUCTION COM						
GRANTEE: SOWELL GEORGE C JR						

BUILDING NOTES

BUILDING DIMENSIONS

BAS=[YR=2019] W15 FOP=[YR=2019] N6 W20 S10 E20 N4$ S4 W20 N4 W15 S32 FST=[YR=2019] S3 FGR=[YR=2019] S22 E20 N2 FOP=[YR=2019] E18 N5 W1 N3 W6 S3 W11 S5$ N22 W5 FST=[YR=2019] W3 N4 E3 S4$ N4 W3 S3 W6 S3 W6$ E6 N3 W6$ E12 N3 E3 S4 E5 S17 E11 N3 E6 S3 E13 N50$ PTR=E15 FUS=[YR=2019] E7 STR=[YR=2019] N3 E3 S8 W3 N5$ S5 E3 N5 E6 S9 W3 S20 W13 N29$ W15$.

EXTRA FEATURES

LN	OB/XF CODE	DESCRIPTION	BLD	CAP	L	W	UNITS	UT	Adj R	ADJ UNIT PRICE	ORIG COND	YEAR ON	YEAR ACTUAL	Q	% COND	OB/XF MKT VALUE	NOTES
1	0810	CONCRETE A	0	0	19	3	57.00	SF	6.50	6.50	100	2019	2019	3	99	367	
2	0811	CONCRETE B	0	0	0	0	537.00	SF	5.20	5.20	100	2019	2019	3	99	2,764	

LAND DESCRIPTION

TOTAL OB/XF 3,131

LN	USE CODE	CLS	LAND USE DESCRIPTION	CAP	RD	LOC ZONE	FRONT	DEPTH	TOT LND UTS	UNIT TYPE	DT	DPTH FACT	% COND	TOT ADJ	UNIT PRICE	ADJ UNIT PRICE	LAND VALUE	OTHER ADJUSTMENTS AND NOTES	YEAR	DENSITY	DECL	FRZ	YR	CONSRV
1	000100	C	SFR	0			0.00	0.00	1.00	LT		1.00	1.00	1.00	65,000.00	65,000.00	65,000							

REVIEW DATE 10/10/2019 BY KW Total Acres: 0.00 Total Land Value: 65,000 Market: 0 Agricultural: 0 Common: 65,000 PRINTED 08/02/2023 BY SYS