LOT 236
FLORA PARKE UNIT 7A PBK 8/128

PROGRESS RESIDENTIAL BORROWER
23 LLC, PO BOX 4090
SCOTTSDALE, AZ 85261

2023

26-2N-28-0555-0236-0000

BUILDING CHARACTERISTICS

ELEMENT	CD	CONSTRUCTION
Exterior Wall	16	WD FR STUC 100
Roof Structur	03	GABLE/HIP 100
Roof Cover	03	COMP SHNGL 100
Interior Wall	05	DRYWALL 100
Interior Floo	11	CLAY TILE 70
Interior Floo	14	CARPET 30
Air Condition	03	CENTRAL 100
Heating Type	04	AIR DUCTED 100
Bedrooms		4 100
Bathrooms		3 100
Frame	02	WOOD FRAME 100
Stories	1.5	1.5 100
Units		0 100
Occupancy	00	NONE 100
Quality	03	Quality Level 03
DOR CODE	0100	SINGLE FAMILY
MAP NUM		MKT AREA 04
NEIGHBORHOOD/LOC	4041.00	

AREA TYPE	TOTAL GROSS AREA	PCT OF BASE	TOT ADJ AREA	SUBAREA MARKET VALUE
BAS	2,023	100	2,023	266,909
FGR	416	55	229	30,213
FOP	56	30	17	2,243
FOP	192	30	58	7,653
FST	15	55	8	1,055
FUS	432	100	432	56,997
TOTALS	3,134		2,767	365,071

MARKET ADJUSTMENTS

TYPE	MDL	EFF. AREA	TOT ADJ PTS	EFF. BASE RATE	REPL. COST NEW	AYB	EYB	ECON	FNCT		NORM	% COND
0900	01	2,767	113.3760	134.63	372,521	2018	2018	0	0	0	2.00	98.00

1 SNGL FAM – 0% - 2023 Heated Area: 2455 HX Base Yr

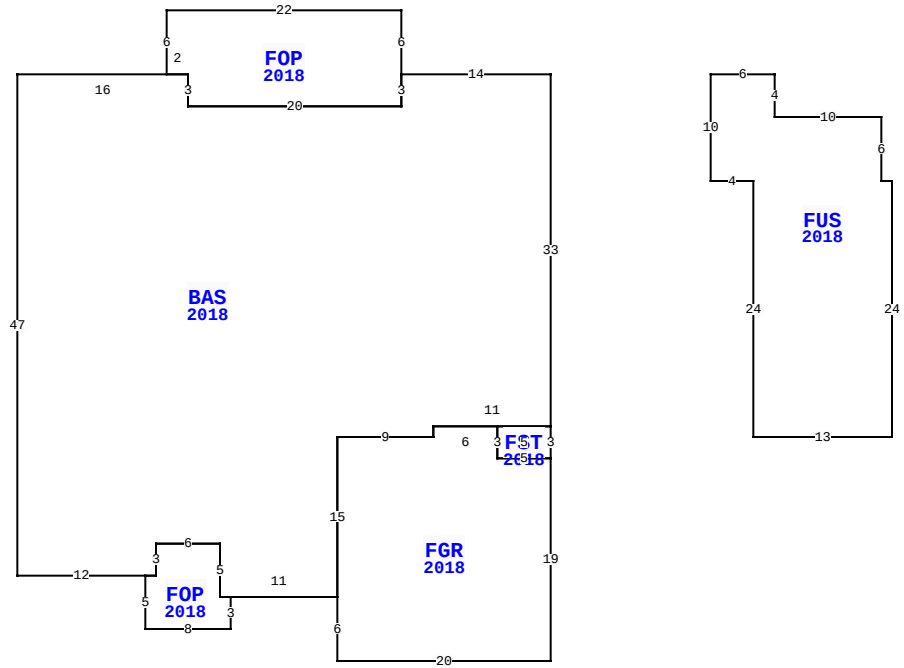

33709 IVY PARKE PL, FERNANDINA BEACH

BLD DATE		LGL DATE	
XF DATE		LAND DATE	
INC DATE		AG DATE	

NASSAU COUNTY PROPERTY

PAGE 1 of 1 4

VALUATION SUMMARY

VALUATION BY	STANDARD
Tax Group: 4	Tax Dist:
BUILDING MARKET VALUE	365,071
TOTAL MARKET OB/XF VALUE	9,476
TOTAL LAND VALUE - MARKET	65,000
TOTAL MARKET VALUE	439,547
SOH/AGL Deduction	0
ASSESSED VALUE	439,547
TOTAL EXEMPTION VALUE	0
BASE TAXABLE VALUE	439,547
TOTAL JUST VALUE	439,547
NCON VALUE	0
INCOME VALUE	
PREVIOUS YEAR MKT VALUE	347,842

PERMIT NUM	DESCRIPTION	AMT	ISSUED
C1709198	CO ISSUED	0	03/09/2018
B1709198	NEW CONSTR	314,906	10/18/2017

SALES DATA

OFF RECORD Number	DATE	TYPE INST	Q U	V I	RSN CD	SALE PRICE
2598/1807	9/29/2022	WD	U	I	11	100
GRANTOR: SFR V TRANCHE 3 BORRO						
GRANTEE: PROGRESS RESIDENTIA						
2557/1623	2/10/2022	SW	U	I	11	100
GRANTOR: ZILLOW HOMES PROPERTY						
GRANTEE: SFR V TRANCHE 3 BOR						

BUILDING NOTES

BUILDING DIMENSIONS

BAS=[YR=2018] W14 FOP=[YR=2018] N6 W22 S6 E2 S3 E20 N3$ S3 W20 N3 W16 S47 E12 FOP=[YR=2018] S5 E8 N3 W1 N5 W6 S3 W1$ E1 N3 E6 S5 E11 FGR=[YR=2018] S6 E20 N19 FST=[YR=2018] N3 W5 S3 E5$ W5 N3 W6 S1 W9 S15$ N15 E9 N1 E11 N33$ PTR=E15 FUS=[YR=2018] E6 S4 E10 S6 E1 S24 W13 N24 W4 N10$ W15$.

EXTRA FEATURES

LN	OB/XF CODE	DESCRIPTION	BLD	CAP	L	W	UNITS	UT	Adj R	ADJ UNIT PRICE	ORIG COND	YEAR ON	YEAR ACTUAL	Q	% COND	OB/XF MKT VALUE	NOTES
1	0811	CONCRETE B	0	0	0	0	568.00	SF	5.20	5.20	100	2018	2018	3	98	2,895	
2	0810	CONCRETE A	0	0	0	0	72.00	SF	6.50	6.50	100	2018	2018	3	98	459	
3	0476	VF 6 SBPL	0	0	0	0	192.00	LF	32.00	32.00	100	2018	2018	3	95	5,837	
4	0470	VNYL GATE	0	0	0	0	1.00	UT	300.00	300.00	100	2018	2018	3	95	285	

LAND DESCRIPTION

TOTAL OB/XF 9,476

LN	USE CODE	CLS	LAND USE DESCRIPTION	CAP	RD	LOC ZONE	FRONT	DEPTH	TOT LND UTS	UNIT TYPE	DT	DPTH FACT	% COND	TOT ADJ	UNIT PRICE	ADJ UNIT PRICE	LAND VALUE	OTHER ADJUSTMENTS AND NOTES	YEAR	DENSITY	DECL	FRZ	YR	CONSRV
1	000100	C	SFR	0			0.00	0.00	1.00	LT		1.00	1.00	1.00	65,000.00	65,000.00	65,000							

REVIEW DATE 02/27/2018 BY DJ Total Acres: 0.00 Total Land Value: 65,000 Market: 0 Agricultural: 0 Common: 65,000 PRINTED 08/02/2023 BY SYS