LOT 99
IN OR 2121/1050
FLORA PARKE #5 PB 7/335

DINIUS PAUL LEO & STEPHANIE LEIGH
33184 PRAIRIE PARKE PLACE
FERNANDINA BEACH, FL 32034

2023

26-2N-28-0553-0099-0000

BUILDING CHARACTERISTICS

ELEMENT	CD	CONSTRUCTION
Exterior Wall	16	WD FR STUC 100
Roof Structur	03	GABLE/HIP 100
Roof Cover	03	COMP SHNGL 100
Interior Wall	05	DRYWALL 100
Interior Floo	12	HARDWOOD 70
Interior Floo	14	CARPET 30
Air Condition	03	CENTRAL 100
Heating Type	04	AIR DUCTED 100
Bedrooms		4 100
Bathrooms		3 100
Frame	02	WOOD FRAME 100
Stories	1.5	1.5 100
Units		0 100
Occupancy	00	NONE 100
Quality	03	Quality Level 03
DOR CODE	0100	SINGLE FAMILY
MAP NUM		MKT AREA 04
NEIGHBORHOOD/LOC	4041.00	

AREA TYPE	TOTAL GROSS AREA	PCT OF BASE	TOT ADJ AREA	SUBAREA MARKET VALUE
BAS	2,228	100	2,228	261,520
FGR	672	55	370	43,431
FOP	45	30	14	1,644
FSP	248	40	99	11,620
FUS	381	100	381	44,722
STR	27	10	3	352
TOTALS	3,601		3,095	363,288

MARKET ADJUSTMENTS

TYPE	MDL	EFF. AREA	TOT ADJ PTS	EFF. BASE RATE	REPL. COST NEW	AYB	EYB	ECON	FNCT		NORM	% COND
0900	01	3,095	103.5000	122.91	380,406	2013	2013	0	0	0	4.50	95.50

1 SNGL FAM – 100% - 2018 Heated Area: 2609 HX Base Yr 2018

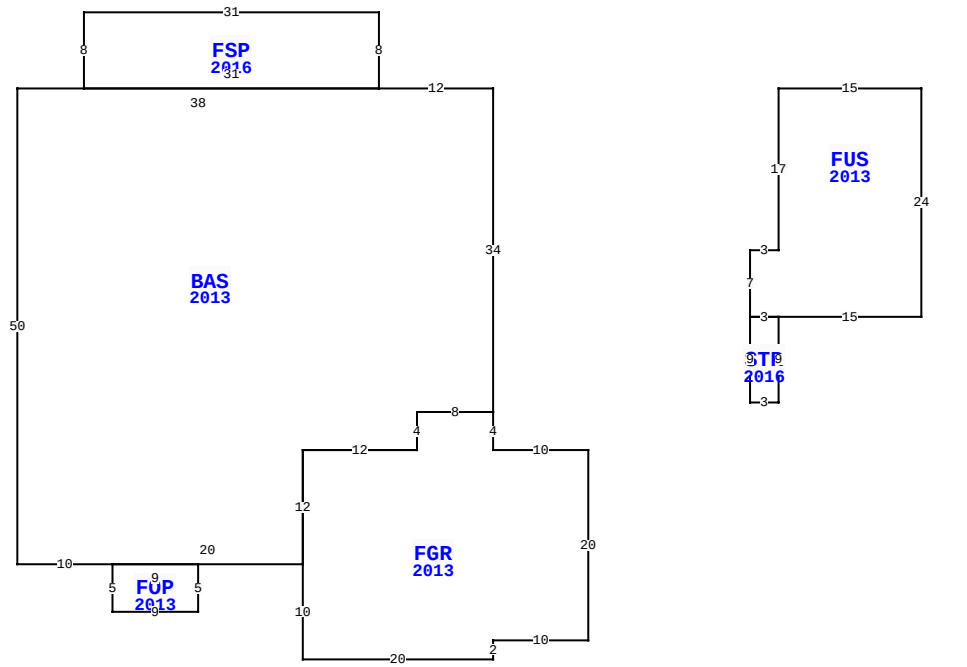

33184 PRAIRIE PARKE PL, FERNANDINA BEACH

BLD DATE		LGL DATE	
XF DATE		LAND DATE	
INC DATE		AG DATE	

NASSAU COUNTY PROPERTY

PAGE 1 of 1 4

VALUATION SUMMARY

VALUATION BY		STANDARD
Tax Group: 4	Tax Dist:	
BUILDING MARKET VALUE		363,288
TOTAL MARKET OB/XF VALUE		12,453
TOTAL LAND VALUE - MARKET		65,000
TOTAL MARKET VALUE		440,741
SOH/AGL Deduction		140,420
ASSESSED VALUE		300,321
TOTAL EXEMPTION VALUE	HX HB VX	55,000
BASE TAXABLE VALUE		245,321
TOTAL JUST VALUE		440,741
NCON VALUE		0
INCOME VALUE		
PREVIOUS YEAR MKT VALUE		347,735

PERMIT NUM	DESCRIPTION	AMT	ISSUED
C1327179	CO ISSUED	0	03/01/2014
B1327179	NEW CONSTR	311,473	05/01/2013

SALES DATA

OFF RECORD Number	DATE	TYPE INST	Q / U	V / I	RSN CD	SALE PRICE
2121/1050	5/19/2017	WD	Q	I	02	353,000
GRANTOR: SABALA CRAIG R & BONN						
GRANTEE: DINIUS PAUL LEO & S						
1918/0513	4/30/2014	WD	U	I	11	100
GRANTOR: SEDA CONSTRUCTION COM						
GRANTEE: SABALA CRAIG R & BO						

BUILDING NOTES

BUILDING DIMENSIONS

BAS=[YR=2013] W12 FSP=[YR=2016] N8 W31 S8 E31 $ W38 S50 E10 FOP=[YR=2013] S5 E9 N5 W9 $ E20 FGR=[YR=2013] S10 E20 N2 E10 N20 W10 N4 W8 S4 W12 S12 $ N12 E12 N4 E8 N34 $ PTR= E30 FUS=[YR=2013] E15 S24 W15 STR=[YR=2016] S9 W3 N9 E3$ W3 N7 E3 N17 $ W30 $.

EXTRA FEATURES

LN	OB/XF CODE	DESCRIPTION	BLD	CAP	L	W	UNITS	UT	Adj R	ADJ UNIT PRICE	ORIG COND	YEAR ON	YEAR ACTUAL	Q	% COND	OB/XF MKT VALUE	NOTES
1	0811	CONCRETE B	0	100	0	0	859.00	SF	5.20	5.20	100	2013	2013	3	95	4,243	
2	0500	FP-PRE FAB	0	100	0	0	1.00	UT	3,500.00	3,500.00	100	2013	2013	3	96	3,360	
3	0855	CONC PAVER	0	100	0	0	440.00	SF	10.00	10.00	100	2016	2016	3	97	4,268	
4	0855	CONC PAVER	0	100	10	6	60.00	SF	10.00	10.00	100	2016	2016	3	97	582	

LAND DESCRIPTION

TOTAL OB/XF 12,453

LN	USE CODE	CLS	LAND USE DESCRIPTION	CAP	RD	LOC ZONE	FRONT	DEPTH	TOT LND UTS	UNIT TYPE	DT	DPTH FACT	% COND	TOT ADJ	UNIT PRICE	ADJ UNIT PRICE	LAND VALUE	OTHER ADJUSTMENTS AND NOTES	YEAR	DENSITY	DECL	FRZ	YR	CONSRV
1	000100	C	SFR	100		PUD	0.00	0.00	1.00	LT		1.00	1.00	1.00	65,000.00	65,000.00	65,000							

REVIEW DATE 01/06/2023 BY DJA Total Acres: 0.00 Total Land Value: 65,000 Market: 0 Agricultural: 0 Common: 65,000 PRINTED 08/02/2023 BY SYS