LOT 303
AMELIA NATIONAL #1B PB 7/191

PATTERSON PERRY N & TINA K
95226 WILD CHERRY DRIVE
FERNANDINA BEACH, FL 32034

2023

26-2N-28-006A-0303-0000

BUILDING CHARACTERISTICS

ELEMENT	CD	CONSTRUCTION
Exterior Wall	16	WD FR STUC 80
Exterior Wall	10	ABOVE AVG 20
Roof Structur	08	IRREGULAR 100
Roof Cover	03	COMP SHNGL 100
Interior Wall	05	DRYWALL 100
Interior Floo	11	CLAY TILE 50
Interior Floo	14	CARPET 50
Air Condition	03	CENTRAL 100
Heating Type	04	AIR DUCTED 100
Bedrooms		3 100
Bathrooms		3.5 100
Frame	02	WOOD FRAME 100
Stories	1.	1. 100
Units		0 100
Quality	03	Quality Level 03
DOR CODE	0100	SINGLE FAMILY
MAP NUM		MKT AREA 04
NEIGHBORHOOD/LOC	4042.00	

AREA TYPE	TOTAL GROSS AREA	PCT OF BASE	TOT ADJ AREA	SUBAREA MARKET VALUE
BAS	3,042	100	3,042	568,206
FGR	238	55	131	24,469
FGR	460	55	253	47,257
FOP	44	30	13	2,428
FOP	319	30	96	17,931
TOTALS	4,103		3,535	660,291

MARKET ADJUSTMENTS

TYPE	MDL	EFF. AREA	TOT ADJ PTS	EFF. BASE RATE	REPL. COST NEW	AYB	EYB	ECON	FNCT		NORM	% COND
0500	11	3,535	134.3025	191.38	676,528	2017	2017	0	0	0	2.40	97.60

1 SFR CUST – 100% - 2020 Heated Area: 3042 HX Base Yr 2020

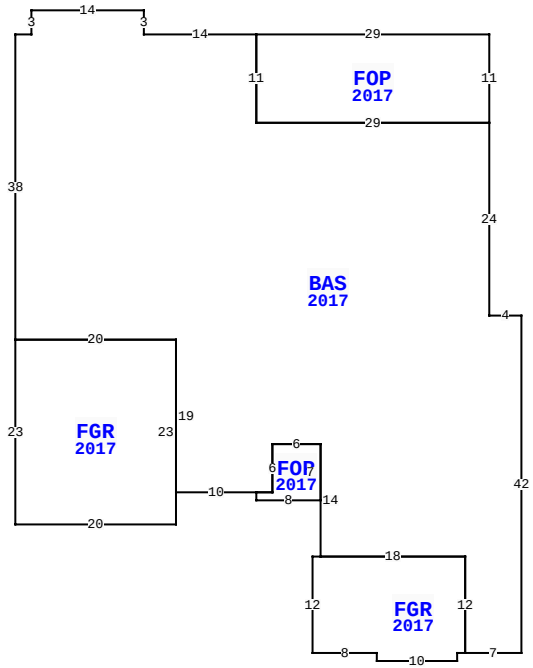

95226 WILD CHERRY DR, FERNANDINA BEACH

BLD DATE		LGL DATE	
XF DATE		LAND DATE	06/12/2023 MLU
INC DATE		AG DATE	

NASSAU COUNTY PROPERTY

PAGE 1 of 1 4

VALUATION SUMMARY

VALUATION BY		STANDARD
Tax Group: 4	Tax Dist:	
BUILDING MARKET VALUE		660,291
TOTAL MARKET OB/XF VALUE		75,996
TOTAL LAND VALUE - MARKET		115,000
TOTAL MARKET VALUE		851,287
SOH/AGL Deduction		276,165
ASSESSED VALUE		575,122
TOTAL EXEMPTION VALUE	HX HB	50,000
BASE TAXABLE VALUE		525,122
TOTAL JUST VALUE		851,287
NCON VALUE		0
INCOME VALUE		
PREVIOUS YEAR MKT VALUE		724,894

PERMIT NUM	DESCRIPTION	AMT	ISSUED
C1700039	CO ISSUED	0	06/19/2017
B1702989	SCRN ROOM	32,410	05/01/2017
B1701667	SWIM POOL	41,300	03/02/2017
B1700039	NEW CONSTR	389,086	01/10/2017

SALES DATA

OFF RECORD Number	DATE	TYPE INST	Q U	V I	RSN CD	SALE PRICE
2294/1557	7/31/2019	WD	Q	I	01	675,000
GRANTOR: GOLD DEBORAH P & MYRT						
GRANTEE: PATTERSON PERRY N &						
2129/0970	6/22/2017	WD	Q	I	01	603,300
GRANTOR: AMELIA NATIONAL CONST						
GRANTEE: GOLD DEBORAH P & MY						

BUILDING NOTES

BUILDING DIMENSIONS

FOP=[YR=2017] W29 BAS=[YR=2017] W14 N3 W14 S3 W2 S38 FGR=[YR=2017] S23 E20 N23 W20$ E20 S19 E10 FOP=[YR=2017] S1 E8 N7 W6 S6 W2$ E2 N6 E6 S14 FGR=[YR=2017] W1 S12 E8 S1 E10 N1 E1 N12 W18$ E18 S12 E7 N42 W4 N24 W29 N11$ S11 E29 N11$.

EXTRA FEATURES

LN	OB/XF CODE	DESCRIPTION	BLD	CAP	L	W	UNITS	UT	Adj R	ADJ UNIT PRICE	ORIG COND	YEAR ON	YEAR ACTUAL	Q	% COND	OB/XF MKT VALUE	NOTES
1	0500	FP-PRE FAB	0	100	0	0	1.00	UT	3,500.00	3,500.00	100	2017	2017	3	98	3,430	
2	0855	CONC PAVER	0	100	6	8	48.00	SF	10.00	10.00	100	2017	2017	3	97	466	
3	0855	CONC PAVER	0	100	0	0	1,086.00	SF	10.00	10.00	100	2017	2017	3	97	10,534	
4	0861	POOL GUNIT	0	100	30	14	420.00	SF	85.00	85.00	100	2017	2017	3	87	31,059	
5	0871	POOL HTR R	0	100	0	0	1.00	UT	2,000.00	2,000.00	100	2017	2017	3	82	1,640	
6	0877	JACUZZI	0	100	0	0	1.00	UT	1,000.00	1,000.00	100	2017	2017	3	82	820	
7	0911	SCRN RM A	0	100	59	17	1,003.00	SF	17.50	17.50	100	2017	2017	3	82	14,393	
8	0830	FLAGSTONE	0	100	0	0	1,173.00	SF	12.00	12.00	100	2017	2017	3	97	13,654	

LAND DESCRIPTION

TOTAL OB/XF 75,996

LN	USE CODE	CLS	LAND USE DESCRIPTION	CAP	RD	LOC ZONE	FRONT	DEPTH	TOT LND UTS	UNIT TYPE	DT	DPTH FACT	% COND	TOT ADJ	UNIT PRICE	ADJ UNIT PRICE	LAND VALUE	OTHER ADJUSTMENTS AND NOTES	YEAR	DENSITY	DECL	FRZ	YR	CONSRV
1	000134	C	SFR POND	100		PUD	0.00	0.00	1.00	LT		1.00	1.00	1.00	115,000.00	115,000.00	115,000							

REVIEW DATE 04/16/2018 BY KW Total Acres: 0.00 Total Land Value: 115,000 Market: 0 Agricultural: 0 Common: 115,000 PRINTED 08/02/2023 BY SYS