LOT 97
IN OR 2037/719
AMELIA NATIONAL #1 PB 7/48

KIROUAC SHAWN L & JENNIFER A
95080 ROYAL PALM CT
FERNANDINA BEACH, FL 32034

2023

26-2N-28-006A-0097-0000

NASSAU COUNTY PROPERTY

BUILDING CHARACTERISTICS

ELEMENT	CD	CONSTRUCTION
Exterior Wall	16	WD FR STUC 70
Exterior Wall	10	ABOVE AVG 30
Roof Structur	08	IRREGULAR 100
Roof Cover	07	CONC TILE 100
Interior Wall	05	DRYWALL 80
Interior Wall	08	DECORATIVE 20
Interior Floo	12	HARDWOOD 50
Interior Floo	14	CARPET 50
Air Condition	03	CENTRAL 100
Heating Type	04	AIR DUCTED 100
Bedrooms		6 100
Bathrooms		5 100
Frame	02	WOOD FRAME 100
Stories	2.	2. 100
Units		0 100
Quality	04	Quality Level 04
DOR CODE	0100	SINGLE FAMILY
MAP NUM		MKT AREA 04
NEIGHBORHOOD/LOC	4042.00	

AREA TYPE	TOTAL GROSS AREA	PCT OF BASE	TOT ADJ AREA	SUBAREA MARKET VALUE
BAS	3,069	100	3,069	633,473
FGR	939	55	516	106,508
FOP	64	30	19	3,921
FOP	88	30	26	5,367
FOP	88	30	26	5,367
FOP	1,196	30	359	74,102
FST	15	55	8	1,651
FST	25	55	14	2,890
FST	61	55	34	7,018
FUS	1,537	100	1,537	317,253
TOTALS	7,688		6,065	1,251,880

MARKET ADJUSTMENTS

TYPE	MDL	EFF. AREA	TOT ADJ PTS	EFF. BASE RATE	REPL. COST NEW	AYB	EYB	ECON	FNCT		NORM	% COND
0500	11	6,065	146.0910	208.18	1,262,612	2020	2020	0	0	0	0.85	99.15

1 SFR CUST – 100% - 2021 Heated Area: 5046 HX Base Yr 2021

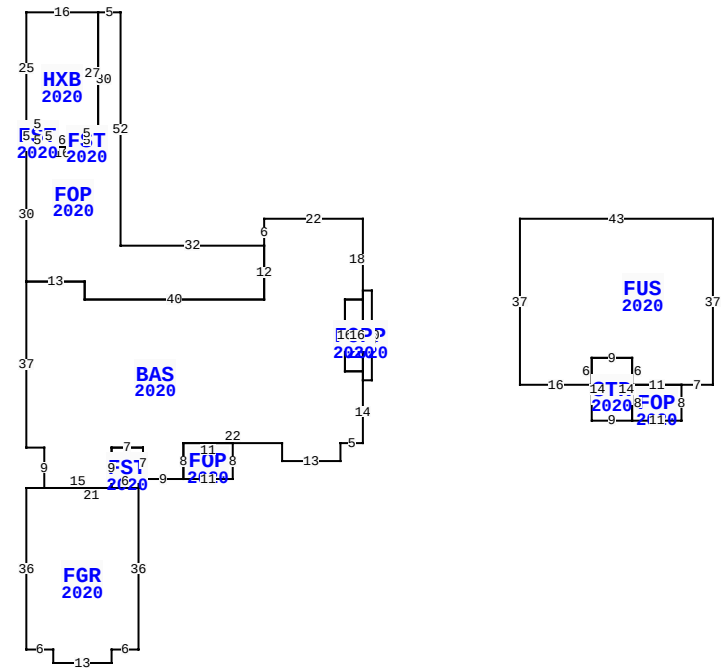

** This building has 13 Sub-Areas

95080 ROYAL PALM CT, FERNANDINA BEACH

BLD DATE		LGL DATE	
XF DATE		LAND DATE	06/12/2023 MLU
INC DATE		AG DATE	

NASSAU COUNTY PROPERTY — VALUATION SUMMARY

VALUATION BY		STANDARD
Tax Group: 4	Tax Dist:	
BUILDING MARKET VALUE		1,251,880
TOTAL MARKET OB/XF VALUE		41,789
TOTAL LAND VALUE - MARKET		115,000
TOTAL MARKET VALUE		1,408,669
SOH/AGL Deduction		441,983
ASSESSED VALUE		966,686
TOTAL EXEMPTION VALUE	HX HB	50,000
BASE TAXABLE VALUE		916,686
TOTAL JUST VALUE		1,408,669
NCON VALUE		0
INCOME VALUE		
PREVIOUS YEAR MKT VALUE		1,214,603

PERMIT NUM	DESCRIPTION	AMT	ISSUED
C1703844	CO ISSUED	0	01/05/2021
B1801171	SWIM POOL	40,000	02/02/2018
B1703844	NEW CONSTR	652,725	05/01/2017

SALES DATA

OFF RECORD Number	DATE	TYPE INST	Q / U	V / I	RSN CD	SALE PRICE
2037/0719	3/31/2016	WD	U	V	37	49,000
GRANTOR: BADIOLA EVARISTO & CA						
GRANTEE: KIROUAC SHAWN L & J						
1388/1462	2/13/2006	WD	Q	V		235,000
GRANTOR: AMELIA NATIONAL ENTER						
GRANTEE: BADIOLA EVARISTO &						

BUILDING NOTES

BUILDING DIMENSIONS

BAS=[YR=2020] W22 S6 FOP=[YR=2020] W32 N52 W5 HXB=[YR=2020] W16 S25 FST=[YR=2020] S5 E5 N5 W5$ E5 S5 E6 FST=[YR=2020] E5 N3 W5 S3$ N3 E5 N27$ S30 W16 S30 E13 S4 E40 N12$ S12 W40 N4 W13 S37 E4 S9 FGR=[YR=2020] W4 S36 E6 S3 E13 N3 E6 N36 FST=[YR=2020] N2 E1 N7 W7 S9 E6$ W21$ E15 N9 E7 S7 E9 FOP=[YR=2020] E11 N8 W11 S8$ N8 E22 S4 E13 N4 E5 N14 STP=[YR=2020] E2 N20 W2 S2 FOP=[YR=2020] W4 S16 E4 N16$ S18$ N2 W4 N16 E4 N18$ PTR= E35 FUS=[YR=2020] E43 S37 W7 FOP=[YR=2020] S8 W11 STR=[YR=2020] W9 N14 E9 S14$ N8 E11$ W11 N6 W9 S6 W16 N37$ W35$.

EXTRA FEATURES

LN	OB/XF CODE	DESCRIPTION	BLD	CAP	L	W	UNITS	UT	Adj R	ADJ UNIT PRICE	ORIG COND	YEAR ON	YEAR ACTUAL	Q	% COND	OB/XF MKT VALUE	NOTES
1	0500	FP-PRE FAB	0	100	0	0	1.00	UT	3,500.00	3,500.00	100	2020	2020	3	99	3,465	
2	0500	FP-PRE FAB	0	100	0	0	1.00	UT	3,500.00	3,500.00	100	2020	2020	3	99	3,465	
3	0855	CONC PAVER	0	100	0	0	2,112.00	SF	10.00	10.00	100	2020	2020	3	99	20,909	
4	0600	SUMMER KIT	0	100	0	0	1.00	UT	15,000.00	15,000.00	100	2020	2020	3	93	13,950	

LAND DESCRIPTION

TOTAL OB/XF 41,789

LN	USE CODE	CLS	LAND USE DESCRIPTION	CAP	RD	LOC ZONE	FRONT	DEPTH	TOT LND UTS	UNIT TYPE	DT	DPTH FACT	% COND	TOT ADJ	UNIT PRICE	ADJ UNIT PRICE	LAND VALUE	OTHER ADJUSTMENTS AND NOTES	YEAR	DENSITY	DECL	FRZ	YR	CONSRV
1	000140	C	SFR GOLF A	100		PUD	0.00	0.00	1.00	LT		1.00	1.00	1.00	115,000.00	115,000.00	115,000							

REVIEW DATE 12/14/2022 BY DJ Total Acres: 0.00 Total Land Value: 115,000 Market: 0 Agricultural: 0 Common: 115,000 PRINTED 08/02/2023 BY SYS