PT SW1/4 OF NE1/4 OF SE1/4 OF
SEC 26-2N-24E IN OR 741/621

HERLONG KEITH E
35020 KAREN ROAD
CALLAHAN, FL 32011

2023

26-2N-24-0000-0004-0100

BUILDING CHARACTERISTICS

ELEMENT	CD	CONSTRUCTION
Exterior Wall	10	ABOVE AVG 100
Roof Structur	03	GABLE/HIP 100
Roof Cover	03	COMP SHNGL 100
Interior Wall	05	DRYWALL 100
Interior Floo	14	CARPET 80
Interior Floo	08	SHT VINYL 20
Air Condition	03	CENTRAL 100
Heating Type	04	AIR DUCTED 100
Bedrooms		1 100
Bathrooms		1 100
Frame	02	WOOD FRAME 100
Stories	1.	1. 100
Units		0 100
Occupancy	00	NONE 100
Quality	04	Quality Level 04

DOR CODE 0100 SINGLE FAMILY
MAP NUM | MKT AREA 08
NEIGHBORHOOD/LOC 8001.00

AREA TYPE	TOTAL GROSS AREA	PCT OF BASE	TOT ADJ AREA	SUBAREA MARKET VALUE
BAS	442	100	442	58,272
FGR	360	55	198	26,104
FHS	144	30	43	5,669
UGR	910	45	410	54,053
TOTALS	1,856		1,093	144,097

MARKET ADJUSTMENTS

TYPE	MDL	EFF. AREA	TOT ADJ PTS	EFF. BASE RATE	REPL. COST NEW	AYB	EYB	ECON	FNCT		NORM	% COND
0900	01	1,093	126.8820	150.67	164,682	1996	1996	0	0	0	12.50	87.50

1 SNGL FAM – 0% - 1997 Heated Area: 485 HX Base Yr 1997

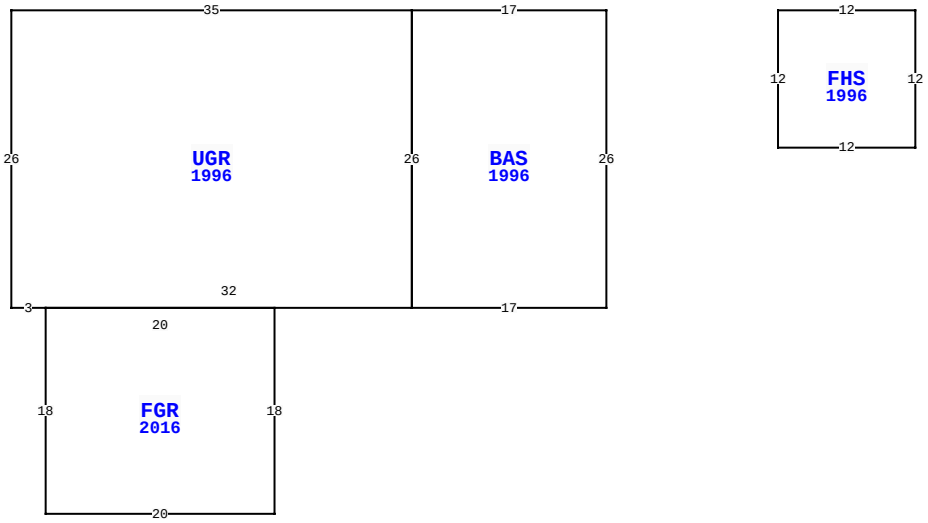

35020 KAREN RD, CALLAHAN

BLD DATE		LGL DATE	
XF DATE		LAND DATE	06/13/2023 MLU
INC DATE		AG DATE	

NASSAU COUNTY PROPERTY

PAGE 1 of 2 6

VALUATION SUMMARY

VALUATION BY		STANDARD
Tax Group: 6	Tax Dist:	
BUILDING MARKET VALUE		500,822
TOTAL MARKET OB/XF VALUE		23,313
TOTAL LAND VALUE - MARKET		32,400
TOTAL MARKET VALUE		556,535
SOH/AGL Deduction		266,046
ASSESSED VALUE		290,489
TOTAL EXEMPTION VALUE	HX HB	50,000
BASE TAXABLE VALUE		240,489
TOTAL JUST VALUE		556,535
NCON VALUE		0
INCOME VALUE		
PREVIOUS YEAR MKT VALUE		423,644

PERMIT NUM	DESCRIPTION	AMT	ISSUED
B23812	ADDITION	20,374	07/01/2010
M15539	MECH OTHER	60	07/01/2010
B23812	ADDITION	20,374	07/01/2010
M15539	MECH OTHER	60	07/01/2010
R11807	REPAIR/RRF	1,500	03/01/2009
C0311147	CO ISSUED	0	10/10/2006

SALES DATA

OFF RECORD Number	DATE	TYPE INST	Q / U	V / I	RSN CD	SALE PRICE
0741/0621	10/10/1995	WD	U	V	07	100
GRANTOR: HERLONG NANCY & CHARL						
GRANTEE: HERLONG KEITH E						
0735/0254	7/28/1995	WD	U	V	06	100
GRANTOR: HERLONG NANCY & CHARL						
GRANTEE: HERLONG KEITH E						

BUILDING NOTES

BUILDING DIMENSIONS

BAS=[YR=1996] W17 UGR=[YR=1996] W35 S26 E3 FGR=[YR=2016] S18 E20 N18 W20$ E32 N26$S26 E17 N26$ PTR=E15 FHS=[YR=1996] E12 S12 W12 N12$ W15$.

EXTRA FEATURES

LN	OB/XF CODE	DESCRIPTION	BLD	CAP	L	W	UNITS	UT	Adj R	ADJ UNIT PRICE	ORIG COND	YEAR ON	YEAR ACTUAL	Q	% COND	OB/XF MKT VALUE	NOTES
2	0811	CONCRETE B	0	100	0	0	524.00	SF	5.20	5.20	100	1996	1996	3	73	1,989	
4	0811	CONCRETE B	0	100	0	0	841.00	SF	5.20	5.20	100	2003	2003	3	84	3,673	
5	0812	CONCRETE C	0	100	0	0	1,910.00	SF	4.00	4.00	100	2007	2007	3	89	6,800	
6	0820	WOOD WALK	0	100	19	3	57.00	SF	11.75	11.75	100	2009	2009	3	40	268	
7	0812	CONCRETE C	0	100	0	0	2,703.00	SF	4.00	4.00	100	2011	2011	3	93	10,055	
8	1242	WD DECK A	0	100	12	8	96.00	SF	10.00	10.00	100	2011	2011	3	55	528	

LAND DESCRIPTION

TOTAL OB/XF 23,313

LN	USE CODE	CLS	LAND USE DESCRIPTION	CAP	RD	LOC ZONE	FRONT	DEPTH	TOT LND UTS	UNIT TYPE	DT	DPTH FACT	% COND	TOT ADJ	UNIT PRICE	ADJ UNIT PRICE	LAND VALUE	OTHER ADJUSTMENTS AND NOTES	YEAR	DENSITY	DECL	FRZ	YR	CONSRV
1	000115	C	SFR ACRES	100	0005	OR	0.00	0.00	1.08	AC		1.00	1.00	1.00	30,000.00	30,000.00	32,400							

REVIEW DATE 08/05/2021 BY TWA Total Acres: 1.08 Total Land Value: 32,400 Market: 0 Agricultural: 0 Common: 32,400 PRINTED 08/02/2023 BY SYS

PT SW1/4 OF NE1/4 OF SE1/4 OF
SEC 26-2N-24E IN OR 741/621

HERLONG KEITH E
35020 KAREN ROAD
CALLAHAN, FL 32011

2023

26-2N-24-0000-0004-0100

BUILDING CHARACTERISTICS

ELEMENT	CD	CONSTRUCTION
Exterior Wall	10	ABOVE AVG 100
Roof Structur	03	GABLE/HIP 100
Roof Cover	03	COMP SHNGL 100
Interior Wall	05	DRYWALL 90
Interior Wall	06	CUST PANEL 10
Interior Floo	12	HARDWOOD 70
Interior Floo	14	CARPET 30
Air Condition	03	CENTRAL 100
Heating Type	04	AIR DUCTED 100
Bedrooms		3 100
Bathrooms		2 100
Frame	02	WOOD FRAME 100
Stories	1.	1. 100
Units		0 100
Occupancy	00	NONE 100
Quality	04	Quality Level 04
DOR CODE	0100	SINGLE FAMILY
MAP NUM		MKT AREA 08
NEIGHBORHOOD/LOC	8001.00	

AREA TYPE	TOTAL GROSS AREA	PCT OF BASE	TOT ADJ AREA	SUBAREA MARKET VALUE
BAS	2,232	100	2,232	267,634
BAS	208	100	208	24,941
DCK	280	10	28	3,358
DCK	56	10	6	720
FOP	480	30	144	17,267
FSP	288	40	115	13,789
UDG	440	55	242	29,017
TOTALS	3,984		2,975	356,725

MARKET ADJUSTMENTS

TYPE	MDL	EFF. AREA	TOT ADJ PTS	EFF. BASE RATE	REPL. COST NEW	AYB	EYB	ECON	FNCT		NORM	% COND
0900	01	2,975	109.1622	129.63	385,649	2006	2006	0	0	0	7.50	92.50

2 SNGL FAM – 100% - 1997 Heated Area: 2440 HX Base Yr 1997

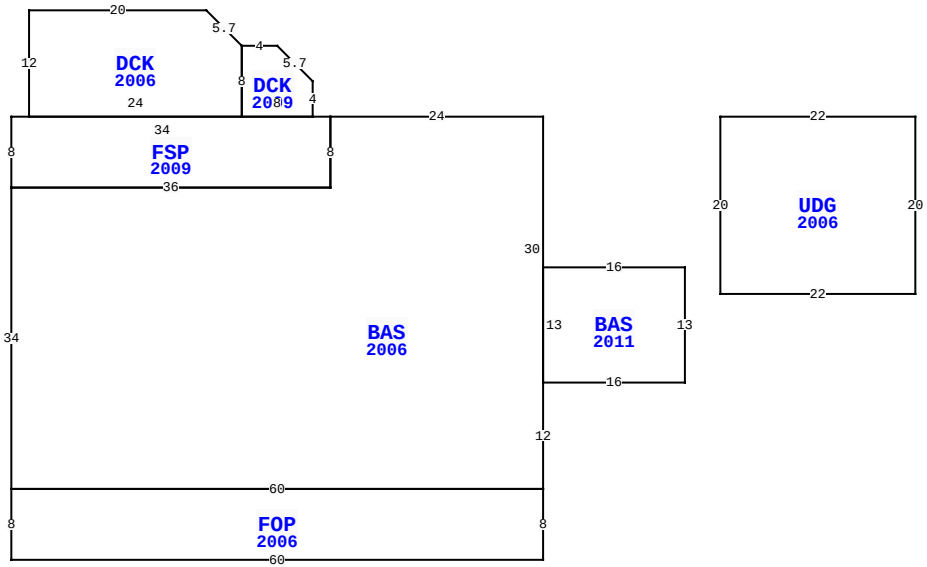

35020 KAREN RD, CALLAHAN

BLD DATE		LGL DATE	
XF DATE		LAND DATE	06/13/2023 MLU
INC DATE		AG DATE	

NASSAU COUNTY PROPERTY

PAGE 2 of 2 6

VALUATION SUMMARY

VALUATION BY		STANDARD
Tax Group: 6	Tax Dist:	
BUILDING MARKET VALUE		500,822
TOTAL MARKET OB/XF VALUE		23,313
TOTAL LAND VALUE - MARKET		32,400
TOTAL MARKET VALUE		556,535
SOH/AGL Deduction		266,046
ASSESSED VALUE		290,489
TOTAL EXEMPTION VALUE	HX HB	50,000
BASE TAXABLE VALUE		240,489
TOTAL JUST VALUE		556,535
NCON VALUE		0
INCOME VALUE		
PREVIOUS YEAR MKT VALUE		423,644

PERMIT NUM	DESCRIPTION	AMT	ISSUED
B0311147	NEW CONSTR	0	10/10/2006
R035055	REPAIR/RRF	2,000	01/05/2003
B018584	XFOB	11,000	07/01/2001
B952291	NEW CONSTR	38,500	10/01/1995

SALES DATA

OFF RECORD Number	DATE	TYPE INST	Q / U	V / I	RSN CD	SALE PRICE
0741/0621	10/10/1995	WD	U	V	07	100
GRANTOR: HERLONG NANCY & CHARL						
GRANTEE: HERLONG KEITH E						
0735/0254	7/28/1995	WD	U	V	06	100
GRANTOR: HERLONG NANCY & CHARL						
GRANTEE: HERLONG KEITH E						

BUILDING NOTES

BUILDING DIMENSIONS

BAS=[YR=2006] W24 FSP=[YR=2009] W2 DCK=[YR=2009] N4 U4 L4 W4 DCK=[YR=2006] L4 U4 W20 S12 E24 N8$ S8 E8$ W34 S8 E36 N8$ S8 W36 S34 FOP=[YR=2006] S8 E60 N8 W60$ E60 N12 BAS=[YR=2011] E16 N13 W16 S13$ N30$ PTR=E20 UDG=[YR=2006] E22 S20 W22 N20$ W20$.

EXTRA FEATURES

LN	OB/XF CODE	DESCRIPTION	BLD	CAP	L	W	UNITS	UT	Adj R	ADJ UNIT PRICE	ORIG COND	YEAR ON	YEAR ACTUAL	Q	% COND	OB/XF MKT VALUE	NOTES

LAND DESCRIPTION

TOTAL OB/XF 0

LN	USE CODE	CLS	LAND USE DESCRIPTION	CAP	RD	LOC ZONE	FRONT	DEPTH	TOT LND UTS	UNIT TYPE	DT	DPTH FACT	% COND	TOT ADJ	UNIT PRICE	ADJ UNIT PRICE	LAND VALUE	OTHER ADJUSTMENTS AND NOTES	YEAR	DENSITY	DECL	FRZ	YR	CONSRV

REVIEW DATE 08/05/2021 BY TWA Total Acres: 1.08 Total Land Value: 32,400 Market: 0 Agricultural: 0 Common: 32,400 PRINTED 08/02/2023 BY SYS