LOT 104
IN OR 1971/1211
FLORA PARKE 2A PB 6/239

GARNER JANET L
1314 N SNAPPER LN
FERNANDINA BEACH, FL 32034

2023

25-2N-28-0550-0104-0000

BUILDING CHARACTERISTICS

ELEMENT	CD	CONSTRUCTION
Exterior Wall	16	WD FR STUC 100
Roof Structur	08	IRREGULAR 100
Roof Cover	03	COMP SHNGL 100
Interior Wall	05	DRYWALL 100
Interior Floo	14	CARPET 70
Interior Floo	08	SHT VINYL 30
Air Condition	03	CENTRAL 100
Heating Type	04	AIR DUCTED 100
Bedrooms		4 100
Bathrooms		3 100
Frame	02	WOOD FRAME 100
Stories	1.	1. 100
Units		0 100
Occupancy	00	NONE 100
Quality	03	Quality Level 03
DOR CODE	0100	SINGLE FAMILY
MAP NUM		MKT AREA 04
NEIGHBORHOOD/LOC	4041.00	

AREA TYPE	TOTAL GROSS AREA	PCT OF BASE	TOT ADJ AREA	SUBAREA MARKET VALUE
BAS	2,310	100	2,310	269,871
FGR	420	55	231	26,987
FOP	50	30	15	1,752
FSP	240	40	96	11,215
TOTALS	3,020		2,652	309,825

MARKET ADJUSTMENTS

TYPE	MDL	EFF. AREA	TOT ADJ PTS	EFF. BASE RATE	REPL. COST NEW	AYB	EYB	ECON	FNCT		NORM	% COND
0900	01	2,652	107.5200	127.68	338,607	2002	2005	0	0	0	8.50	91.50

1 SNGL FAM – 0% - 0 Heated Area: 2310 HX Base Yr

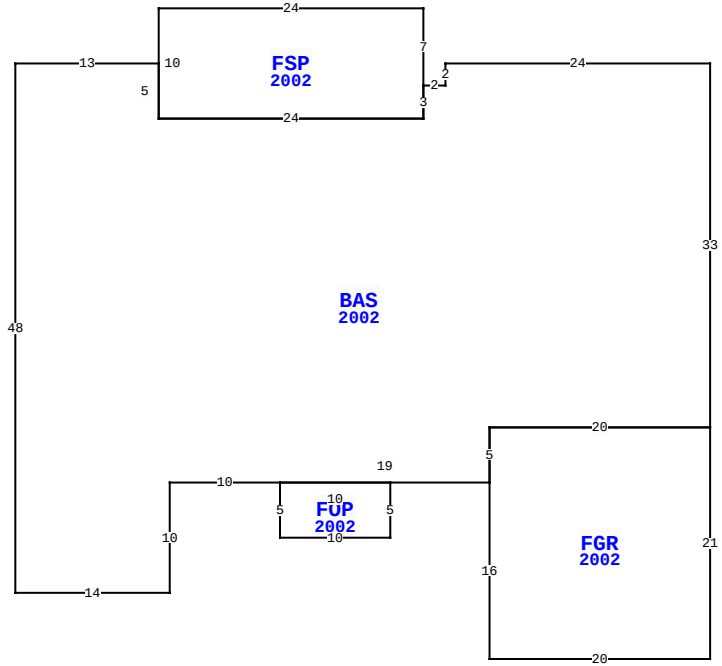

30489 FOREST PARKE DR, FERNANDINA BEACH

BLD DATE		LGL DATE	
XF DATE		LAND DATE	06/22/2023 MLU
INC DATE		AG DATE	

NASSAU COUNTY PROPERTY

PAGE 1 of 1 4

VALUATION SUMMARY

VALUATION BY	STANDARD
Tax Group: 4	Tax Dist:
BUILDING MARKET VALUE	309,825
TOTAL MARKET OB/XF VALUE	8,710
TOTAL LAND VALUE - MARKET	65,000
TOTAL MARKET VALUE	383,535
SOH/AGL Deduction	77,815
ASSESSED VALUE	305,720
TOTAL EXEMPTION VALUE	0
BASE TAXABLE VALUE	305,720
TOTAL JUST VALUE	383,535
NCON VALUE	0
INCOME VALUE	
PREVIOUS YEAR MKT VALUE	307,807

PERMIT NUM	DESCRIPTION	AMT	ISSUED
B2003115	REPAIR/RRF	25,300	05/01/2020
M2004087	H/AC	0	05/01/2020

SALES DATA

OFF RECORD Number	DATE	TYPE INST	Q U	V I	RSN CD	SALE PRICE
1971/1211	3/24/2015	SW	U	I	12	192,700
GRANTOR: THE BANK OF NEW YORK						
GRANTEE: GARNER THOMAS W & J						
1930/1902	8/04/2014	CT	U	I	18	100
GRANTOR: CLERK OF COURT						
GRANTEE: THE BANK OF NEW YOR						

BUILDING NOTES

BUILDING DIMENSIONS

BAS=[YR=2002] W24 S2 W2 FSP=[YR=2002] N7 W24 S10 E24 N3 $ S3 W24 N5 W13 S48 E14 N10 E10 FOP=[YR=2002] S5 E10 N5 W10 $ E19 FGR=[YR=2002] S16 E20 N21 W20 S5 $ N5 E20 N33 $.

EXTRA FEATURES

LN	OB/XF CODE	DESCRIPTION	BLD	CAP	L	W	UNITS	UT	Adj R	ADJ UNIT PRICE	ORIG COND	YEAR ON	YEAR ACTUAL	Q	% COND	OB/XF MKT VALUE	NOTES
1	0500	FP-PRE FAB	0	0	0	0	1.00	UT	3,500.00	3,500.00	100	2002	2002	3	87	3,045	
2	0811	CONCRETE B	0	0	0	0	612.00	SF	5.20	5.20	100	2002	2002	3	83	2,641	
3	0462	ST/AL FNC	0	0	90	0	360.00	SF	10.00	10.00	100	2016	2016	3	84	3,024	

LAND DESCRIPTION

TOTAL OB/XF 8,710

LN	USE CODE	CLS	LAND USE DESCRIPTION	CAP	RD	LOC ZONE	FRONT	DEPTH	TOT LND UTS	UNIT TYPE	DT	DPTH FACT	% COND	TOT ADJ	UNIT PRICE	ADJ UNIT PRICE	LAND VALUE	OTHER ADJUSTMENTS AND NOTES	YEAR	DENSITY	DECL	FRZ	YR	CONSRV
1	000134	C	SFR POND	0		PUD	0.00	0.00	1.00	LT		1.00	1.00	1.00	65,000.00	65,000.00	65,000							

REVIEW DATE 01/06/2023 BY DJA Total Acres: 0.00 Total Land Value: 65,000 Market: 0 Agricultural: 0 Common: 65,000 PRINTED 08/02/2023 BY SYS