LOT 40
IN OR 2137/74
ESMT PT OR 1569/134

DONOGHUE JAMES & JANICE G
96120 WINDSOR DR
YULEE, FL 32097

2023

24-2N-28-1310-0040-0000

NASSAU COUNTY PROPERTY

BUILDING CHARACTERISTICS

ELEMENT	CD	CONSTRUCTION
Exterior Wall	16	WD FR STUC 100
Roof Structur	03	GABLE/HIP 100
Roof Cover	03	COMP SHNGL 100
Interior Wall	05	DRYWALL 100
Interior Floo	14	CARPET 60
Interior Floo	11	CLAY TILE 40
Air Condition	03	CENTRAL 100
Heating Type	04	AIR DUCTED 100
Bedrooms		4 100
Bathrooms		3 100
Frame	02	WOOD FRAME 100
Stories	1.5	1.5 100
Units		0 100
Occupancy	00	NONE 100
Quality	04	Quality Level 04
DOR CODE	0100	SINGLE FAMILY
MAP NUM		MKT AREA 04
NEIGHBORHOOD/LOC	4078.00	

AREA TYPE	TOTAL GROSS AREA	PCT OF BASE	TOT ADJ AREA	SUBAREA MARKET VALUE
BAS	2,120	100	2,120	279,172
FGR	560	55	308	40,559
FOP	28	30	8	1,053
FOP	140	30	42	5,530
FUS	277	100	277	36,477
USP	280	30	84	11,062
TOTALS	3,405		2,839	373,854

MARKET ADJUSTMENTS

TYPE	MDL	EFF. AREA	TOT ADJ PTS	EFF. BASE RATE	REPL. COST NEW	AYB	EYB	ECON	FNCT		NORM	% COND
0900	01	2,839	116.1216	137.89	391,470	2013	2013	0	0	0	4.50	95.50

1 SNGL FAM – 100% - 2018 Heated Area: 2397 HX Base Yr 2018

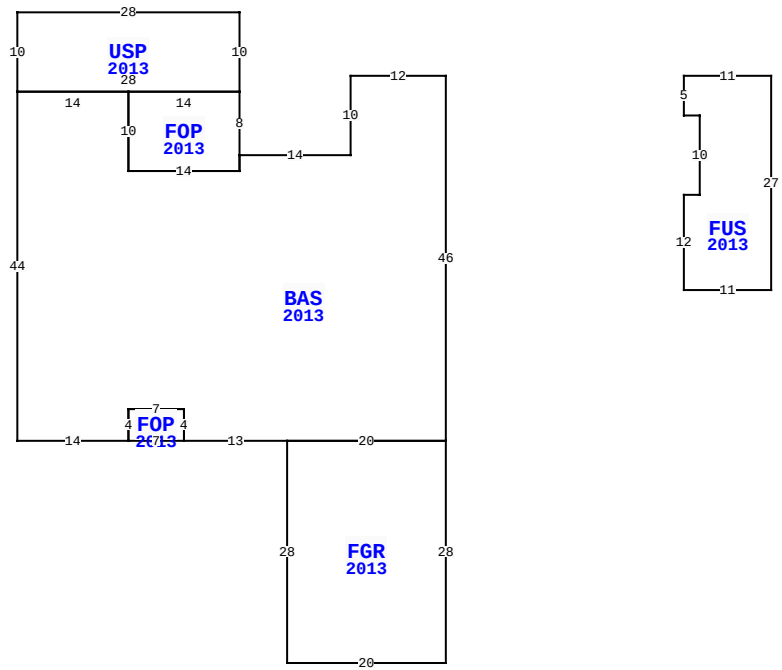

96120 WINDSOR DR, YULEE

BLD DATE		LGL DATE	
XF DATE		LAND DATE	06/13/2023 MLU
INC DATE		AG DATE	

NASSAU COUNTY PROPERTY — VALUATION SUMMARY

VALUATION BY		STANDARD
Tax Group: 4	Tax Dist:	
BUILDING MARKET VALUE		373,854
TOTAL MARKET OB/XF VALUE		10,678
TOTAL LAND VALUE - MARKET		105,000
TOTAL MARKET VALUE		489,532
SOH/AGL Deduction		186,949
ASSESSED VALUE		302,583
TOTAL EXEMPTION VALUE	HX HB	50,000
BASE TAXABLE VALUE		252,583
TOTAL JUST VALUE		489,532
NCON VALUE		0
INCOME VALUE		
PREVIOUS YEAR MKT VALUE		419,779

PERMIT NUM	DESCRIPTION	AMT	ISSUED
B1328145	SHED8X8	2,692	12/01/2013
B137497	ADDITION	5,888	09/01/2013
B1226559	CO ISSUED	0	04/16/2013
E25693	NEW CONSTR	0	12/01/2012
M17782	H/AC	0	12/01/2012
P1216218	NEW CONSTR	0	11/01/2012

SALES DATA

OFF RECORD Number	DATE	TYPE INST	Q / U	V / I	RSN CD	SALE PRICE
2137/0074	7/28/2017	WD	Q	I	01	310,000
GRANTOR: JERNIGAN WILLIAM A &						
GRANTEE: DONOGHUE JAMES JOSE						
1861/1666	6/04/2013	WD	Q	I	01	275,000
GRANTOR: AMELIA MARSHES LLC						
GRANTEE: JERNIGAN WILLIAM A						

BUILDING NOTES

BUILDING DIMENSIONS

BAS=[YR=2013] W12 S10 W14 FOP=[YR=2013] N8USP=[YR=2013] N10 W28 S10 E28 $ W14 S10 E14 N2 $ S2 W14 N10W14 S44 E14 FOP=[YR=2013] E7 N4 W7 S4 $ N4 E7 S4 E13 FGR=[YR=2013] S28E20 N28 W20 $ E20 N46 $ PTR= E30 FUS=[YR=2013] E11 S27 W11 N12 E2 N10 W2 N5 $ W30 $.

EXTRA FEATURES

LN	OB/XF CODE	DESCRIPTION	BLD	CAP	L	W	UNITS	UT	Adj R	ADJ UNIT PRICE	ORIG COND	YEAR ON	YEAR ACTUAL	Q	% COND	OB/XF MKT VALUE	NOTES
1	0855	CONC PAVER	0	100	0	0	1,124.00	SF	10.00	10.00	100	2013	2013	3	95	10,678	

LAND DESCRIPTION

TOTAL OB/XF 10,678

LN	USE CODE	CLS	LAND USE DESCRIPTION	CAP	RD	LOC ZONE	FRONT	DEPTH	TOT LND UTS	UNIT TYPE	DT	DPTH FACT	% COND	TOT ADJ	UNIT PRICE	ADJ UNIT PRICE	LAND VALUE	OTHER ADJUSTMENTS AND NOTES	YEAR	DENSITY	DECL	FRZ	YR	CONSRV
1	000116	C	SFR MARSH	100		PUD	0.00	0.00	1.00	LT		1.00	1.00	1.00	105,000.00	105,000.00	105,000							

REVIEW DATE 08/09/2018 BY KW Total Acres: 0.00 Total Land Value: 105,000 Market: 0 Agricultural: 0 Common: 105,000 PRINTED 08/02/2023 BY SYS