LOT 34
ESMT PT OR 1569/134
MARSHES @ LANCEFORD PB 7/141

KORN JARED W & LAUREN B
101 WINTERBERRY LN
SMITHFIELD, VA 23430

2023

24-2N-28-1310-0034-0000

BUILDING CHARACTERISTICS

ELEMENT	CD	CONSTRUCTION
Exterior Wall	16	WD FR STUC 100
Roof Structur	08	IRREGULAR 100
Roof Cover	03	COMP SHNGL 100
Interior Wall	05	DRYWALL 100
Interior Floo	14	CARPET 60
Interior Floo	11	CLAY TILE 40
Air Condition	03	CENTRAL 100
Heating Type	04	AIR DUCTED 100
Bedrooms		4 100
Bathrooms		2.5 100
Frame	02	WOOD FRAME 100
Stories	2.	2. 100
Units		0 100
Occupancy	00	NONE 100
Quality	02	Quality Level 02
DOR CODE	0100	SINGLE FAMILY
MAP NUM		MKT AREA 04
NEIGHBORHOOD/LOC	4078.00	

AREA TYPE	TOTAL GROSS AREA	PCT OF BASE	TOT ADJ AREA	SUBAREA MARKET VALUE
BAL	117	15	18	1,995
BAS	1,788	100	1,788	198,156
FGR	529	55	291	32,250
FOP	18	30	5	554
FOP	149	30	45	4,987
FUS	912	100	912	101,073
TOTALS	3,513		3,059	339,015

MARKET ADJUSTMENTS

TYPE	MDL	EFF. AREA	TOT ADJ PTS	EFF. BASE RATE	REPL. COST NEW	AYB	EYB	ECON	FNCT		NORM	% COND
0900	01	3,059	99.8108	118.53	362,583	2009	2009	0	0	0	6.50	93.50

1 SNGL FAM – 100% - 2020 Heated Area: 2700 HX Base Yr 2020

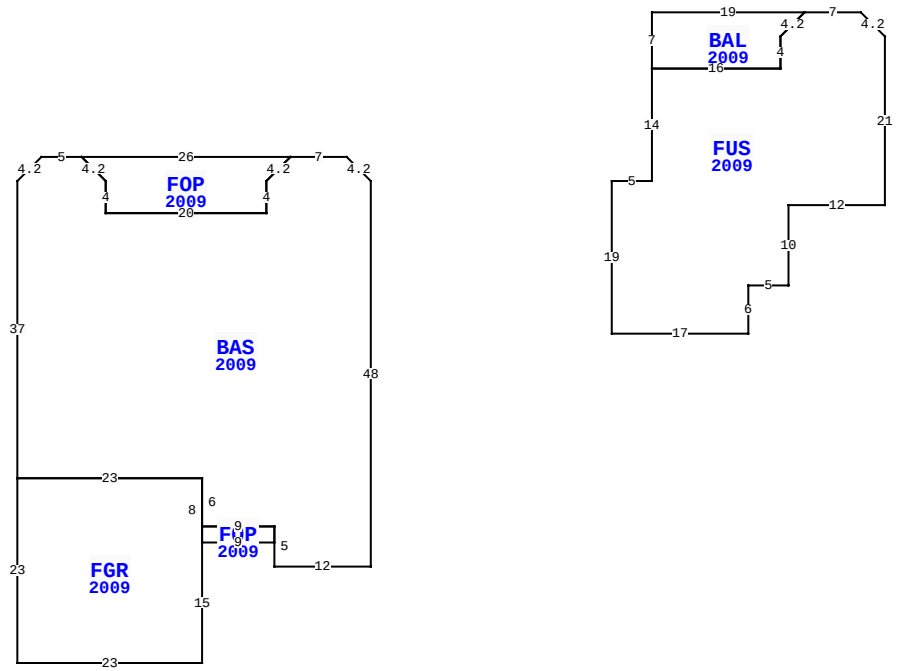

96066 WINDSOR DR, YULEE

BLD DATE	03/03/2023 NW	LGL DATE	
XF DATE		LAND DATE	06/13/2023 MLU
INC DATE		AG DATE	

NASSAU COUNTY PROPERTY

PAGE 1 of 1 4

VALUATION SUMMARY

VALUATION BY		STANDARD
Tax Group: 4	Tax Dist:	
BUILDING MARKET VALUE		339,015
TOTAL MARKET OB/XF VALUE		7,326
TOTAL LAND VALUE - MARKET		75,000
TOTAL MARKET VALUE		421,341
SOH/AGL Deduction		139,990
ASSESSED VALUE		281,351
TOTAL EXEMPTION VALUE	HX HB XM	50,000
BASE TAXABLE VALUE		231,351
TOTAL JUST VALUE		421,341
NCON VALUE		0
INCOME VALUE		
PREVIOUS YEAR MKT VALUE		353,612

PERMIT NUM	DESCRIPTION	AMT	ISSUED
C22246	CO ISSUED	0	05/05/2009
E21633	ELEC OTHER	2,200	03/01/2009
M14397	MECH OTHER	0	02/01/2009
P13666	OTHER	0	02/01/2009
R11738	REPAIR/RRF	1,500	02/01/2009
B22246	NEW CONSTR	254,060	02/01/2009

SALES DATA

OFF RECORD Number	DATE	TYPE INST	Q / U	V / I	RSN CD	SALE PRICE
2481/0811	7/22/2021	QC	U	I	11	100
GRANTOR: KORN JARED W						
GRANTEE: KORN JARED W & LAUR						
2460/1681	5/03/2021	QC	U	I	11	100
GRANTOR: KORN JARED W & LAUREN						
GRANTEE: KORN JARED W & LAUR						

BUILDING NOTES

BUILDING DIMENSIONS

BAS=[YR=2009] U3 L3 W7 FOP=[YR=2009] W26 D3 R3 S4 E20 N4 U3 R3 $ D3 L3 S4 W20 N4 U3 L3 W5 D3 L3 S37
FGR=[YR=2009] S23 E23 N15 FOP=[YR=2009] E9 N2 W9 S2$ N8 W23 $ E23 S6 E9 S5 E12 N48 $ PTR= E30 FUS=[YR=2009] E5 N14
BAL=[YR=2009] N7 E19 D3 L3 S4 W16 $ E16 N4 U3 R3 E7 D3 R3 S21 W12 S10 W5 S6 W17 N19 $ W30 $.

EXTRA FEATURES

LN	OB/XF CODE	DESCRIPTION	BLD	CAP	L	W	UNITS	UT	Adj R	ADJ UNIT PRICE	ORIG COND	YEAR ON	YEAR ACTUAL	Q	% COND	OB/XF MKT VALUE	NOTES
1	0855	CONC PAVER	0	100	0	0	805.00	SF	10.00	10.00	100	2009	2009	3	91	7,326	

LAND DESCRIPTION

TOTAL OB/XF 7,326

LN	USE CODE	CLS	LAND USE DESCRIPTION	CAP	RD	LOC ZONE	FRONT	DEPTH	TOT LND UTS	UNIT TYPE	DT	DPTH FACT	% COND	TOT ADJ	UNIT PRICE	ADJ UNIT PRICE	LAND VALUE	OTHER ADJUSTMENTS AND NOTES	YEAR	DENSITY	DECL	FRZ	YR	CONSRV
1	000100	C	SFR	100		PUD	0.00	0.00	1.00	LT		1.00	1.00	1.00	75,000.00	75,000.00	75,000							

REVIEW DATE 08/10/2018 BY KWX Total Acres: 0.00 Total Land Value: 75,000 Market: 0 Agricultural: 0 Common: 75,000 PRINTED 08/02/2023 BY SYS