LOTS 32 & 33
ESMT PT OR 1569/134
MARSHES @ LANCEFORD PB 7/141

OUTTEN BRUCE P REV TRUST/OUTTEN BRUCE P TRUSTEE
96200 ASHFORD COURT
YULEE, FL 32097

2023

24-2N-28-1310-0032-0000

BUILDING CHARACTERISTICS

ELEMENT	CD	CONSTRUCTION
Exterior Wall	16	WD FR STUC 100
Roof Structur	08	IRREGULAR 100
Roof Cover	03	COMP SHNGL 100
Interior Wall	05	DRYWALL 100
Interior Floo	14	CARPET 60
Interior Floo	11	CLAY TILE 40
Air Condition	03	CENTRAL 100
Heating Type	04	AIR DUCTED 100
Bedrooms		4 100
Bathrooms		3 100
Frame	02	WOOD FRAME 100
Stories	2.	2. 100
Units		0 100
Occupancy	00	NONE 100
Quality	03	Quality Level 03
DOR CODE	0100	SINGLE FAMILY
MAP NUM		MKT AREA 04
NEIGHBORHOOD/LOC	4078.00	

AREA TYPE	TOTAL GROSS AREA	PCT OF BASE	TOT ADJ AREA	SUBAREA MARKET VALUE
BAS	2,126	100	2,126	249,099
FGR	886	55	487	57,060
FOP	35	30	10	1,172
FSP	224	40	90	10,546
FUS	238	100	238	27,886
FUS	945	100	945	110,724
STR	64	10	6	703
UOP	216	20	43	5,038
TOTALS	4,734		3,945	462,228

MARKET ADJUSTMENTS

TYPE	MDL	EFF. AREA	TOT ADJ PTS	EFF. BASE RATE	REPL. COST NEW	AYB	EYB	ECON	FNCT		NORM	% COND
0900	01	3,945	102.7800	122.05	481,487	2014	2014	0	0	0	4.00	96.00

1 SNGL FAM – 100% - 2020 Heated Area: 3309 HX Base Yr 2020

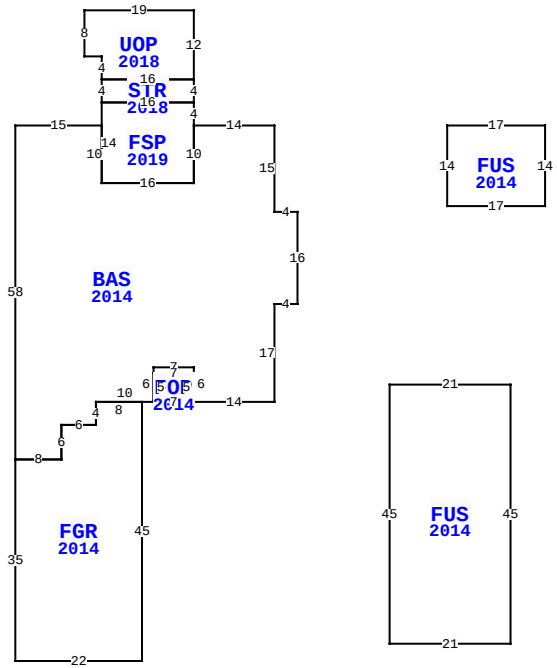

96200 ASHFORD CT, YULEE

BLD DATE		LGL DATE	
XF DATE		LAND DATE	06/13/2023 MLU
INC DATE		AG DATE	

NASSAU COUNTY PROPERTY

PAGE 1 of 1 4

VALUATION SUMMARY

VALUATION BY		STANDARD
Tax Group: 4	Tax Dist:	
BUILDING MARKET VALUE		462,228
TOTAL MARKET OB/XF VALUE		9,880
TOTAL LAND VALUE - MARKET		157,500
TOTAL MARKET VALUE		629,608
SOH/AGL Deduction		183,834
ASSESSED VALUE		445,774
TOTAL EXEMPTION VALUE	HX HB	50,000
BASE TAXABLE VALUE		395,774
TOTAL JUST VALUE		629,608
NCON VALUE		0
INCOME VALUE		
PREVIOUS YEAR MKT VALUE		543,501

PERMIT NUM	DESCRIPTION	AMT	ISSUED
B1428753	CO ISSUED	0	10/23/2014
B1428753	NEW CONSTR	404,788	05/01/2014

SALES DATA

OFF RECORD Number	DATE	TYPE INST	Q / U	V / I	RSN CD	SALE PRICE
2623/1162	2/20/2023	QC	U	I	11	100
GRANTOR: OUTTEN BRUCE P & CECI						
GRANTEE: OUTTEN BRUCE P REV						
2312/1762	10/10/2019	WD	Q	I	01	481,800
GRANTOR: LARSON HENRY A & MARI						
GRANTEE: OUTTEN BRUCE P & CE						

BUILDING NOTES

BUILDING DIMENSIONS

BAS=[YR=2014] W14 FSP=[YR=2019] N4 STR=[YR=2018] N4 UOP=[YR=2018] N12 W19 S8 E3 S4 E16$ W16 S4 E16$ W16 S14 E16 N10 $ S10 W16 N10 W15 S58 FGR=[YR=2014] S35 E22 N45 W8 S4 W6 S6 W8$ E8 N6 E6 N4 E10 FOP=[YR=2014] E7 N5 W7 S5 $ N6 E7 S6 E14 N17 E4 N16 W4 N15 $ PTR= E30 FUS=[YR=2014] E17 S14 W17 N14 $ W30 PTR= S90 E20 FUS=[YR=2014] N45 E21 S45 W21 $ W20 N90 $.

EXTRA FEATURES

LN	OB/XF CODE	DESCRIPTION	BLD	CAP	L	W	UNITS	UT	Adj R	ADJ UNIT PRICE	ORIG COND	YEAR ON	YEAR ACTUAL	Q	% COND	OB/XF MKT VALUE	NOTES
1	0855	CONC PAVER	0	100	0	0	1,040.00	SF	10.00	10.00	100	2014	2014	3	95	9,880	

LAND DESCRIPTION

TOTAL OB/XF 9,880

LN	USE CODE	CLS	LAND USE DESCRIPTION	CAP	RD	LOC ZONE	FRONT	DEPTH	TOT LND UTS	UNIT TYPE	DT	DPTH FACT	% COND	TOT ADJ	UNIT PRICE	ADJ UNIT PRICE	LAND VALUE	OTHER ADJUSTMENTS AND NOTES	YEAR	DENSITY	DECL	FRZ	YR	CONSRV
1	000116	C	SFR MARSH	100		PUD	0.00	0.00	2.00	LT		1.00	1.00	0.75	105,000.00	78,750.00	157,500							

REVIEW DATE 01/24/2020 BY KW Total Acres: 0.00 Total Land Value: 157,500 Market: 0 Agricultural: 0 Common: 157,500 PRINTED 08/02/2023 BY SYS